SUPERIOR CHUTES
& COMPACTORS INSTALLATIONS, INC.
MFG: CHUTES ENTERPRISES

PRODUCT SPECIFICATION
SC-SPEC-TRISORT

AUTOMATED WASTE & RECYCLING DIVERTER

Tri-Sorter System

Three-stream sorting from a single trash chute

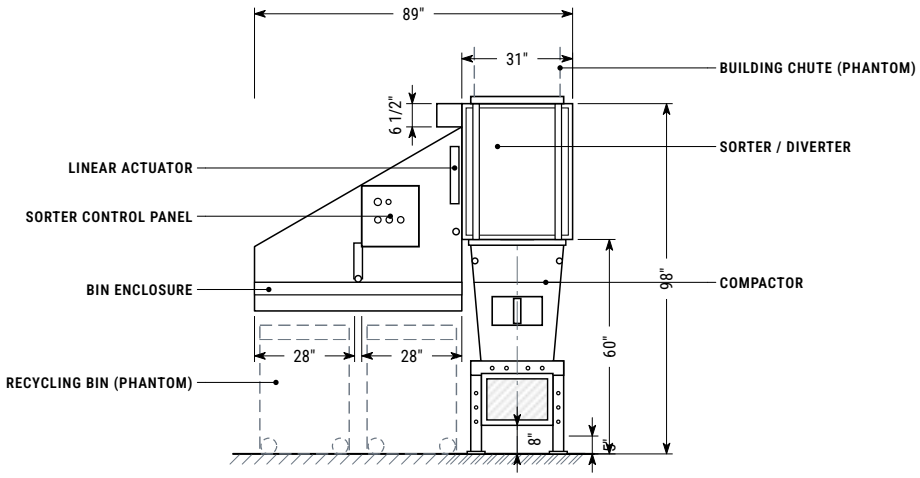

FRONT ELEVATION

Tri-Sorter on compactor — general arrangement, dimensions in inches. See drawing sheets for complete dimensions.

OVERVIEW

The Tri-Sorter System is an automated waste and recycling diverter unit that sorts refuse into three categories: trash, paper and commingled recyclables. The system has two main parts: the tri-sorter unit with its integrated control panel, and the chute intake doors mounted on each required floor. Typically the tri-sorter is mounted directly above a compactor, with the building chute terminating at the sorter. In non-compactor installations, the system is configured with three separate collection bins.

KEY FEATURES

- Two linear-actuator diverter gates route waste to the compactor or one of two bins
- Default diverter position: trash — waste goes to the compactor unless recycling is selected
- Bin presence and fullness sensors with visual and audible alarms
- Full bins are bypassed; compactor-full condition locks the diverter to protect the actuator
- Illuminated push buttons (3) and audible chime at every intake door

3	**89"**	**98"**	**30 sec**
WASTE STREAMS	OVERALL WIDTH	OVERALL HEIGHT	DOOR TIME-OUT

COMPANY
Superior Chutes and Compactors Installations, Inc.
Mfg: Chutes Enterprises

OFFICE
774 Manor Rd, Suite 207
Staten Island, NY 10314

SHOP
30 N 15th Street
East Orange, NJ 07017

PHONE & EMAIL
Office 718-494-2247
Cell 917-701-3268 · Fax 718-494-2257
chutesenterprises@gmail.com

System Specifications

SYSTEM CONFIGURATION

- Standard installation: tri-sorter mounted on the compactor, with bins located on either the left or right side.
- Diverter gates: (2) linear-actuator-controlled diverters direct flow to the designated bins.
- Default diverter position: trash.
- Sensors detect bin presence and fullness, triggering visual and audible alarms if a bin is missing or full.
- Full bins are bypassed; the default is used to avoid overflow.
- Compactor-full condition prevents diverter movement to protect the actuator.

CONTROL SYSTEM

- Centralized control panel located at the tri-sorter unit.
- Powered door circuitry with logic handling, status polling and request sequencing.
- Visual and audible diagnostics for door and bin conditions.
- Compatible with Tri-Sorter or Bi-Sorter setups.

DOOR & USER INTERFACE

- Chute intake doors installed every 10 to 17 vertical feet, based on building layout.
- Doors wired in a daisy-chain configuration, with power and communication run to each floor.
- Door panels are powered by the sorter's control panel.
- Each door includes control electronics, illuminated push buttons (3) and an audible chime for door-release indication.
- Push buttons glow to indicate system readiness.
- Blinking push buttons signal a door malfunction (e.g., door not fully closed).

KEY DIMENSIONS

Overall width	**89"**
Sorter width	**31"**
Overall height	**98"**
Top housing	**6 1/2"**
Bin bays	**28" + 28"**
Compactor height (as shown)	**60"**
Compactor length / hopper	**80" / 56"**
Nozzle clearance	**8"**

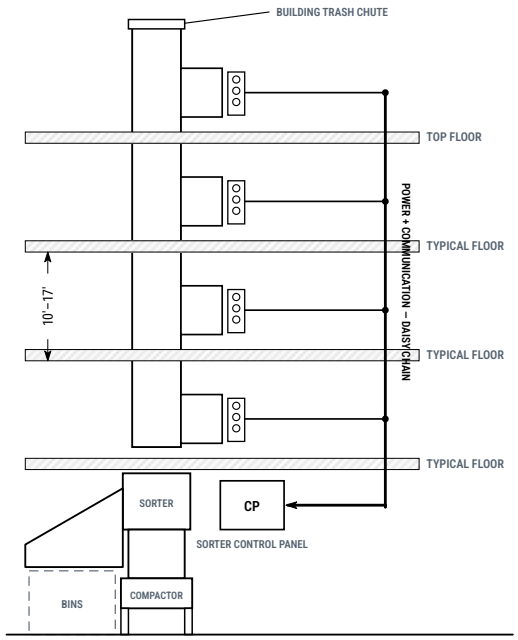

Schematic riser — intake doors daisy-chained to the sorter control panel. Not to scale.

HOW IT WORKS

Residents choose the waste type at the intake door. The sorter's diverter gates position the chute discharge to the compactor (trash, default) or to the paper or commingled bin, then releases the door. While one door is being processed, all other doors are locked out to prevent interference.

> **Door spacing.** Chute intake doors are installed every 10 to 17 vertical feet, based on building layout. Each door panel is powered from the sorter control panel through the daisy-chain wiring.

Sequence of Operation

From the resident's button press to system reset. Applies to every intake door on the chute.

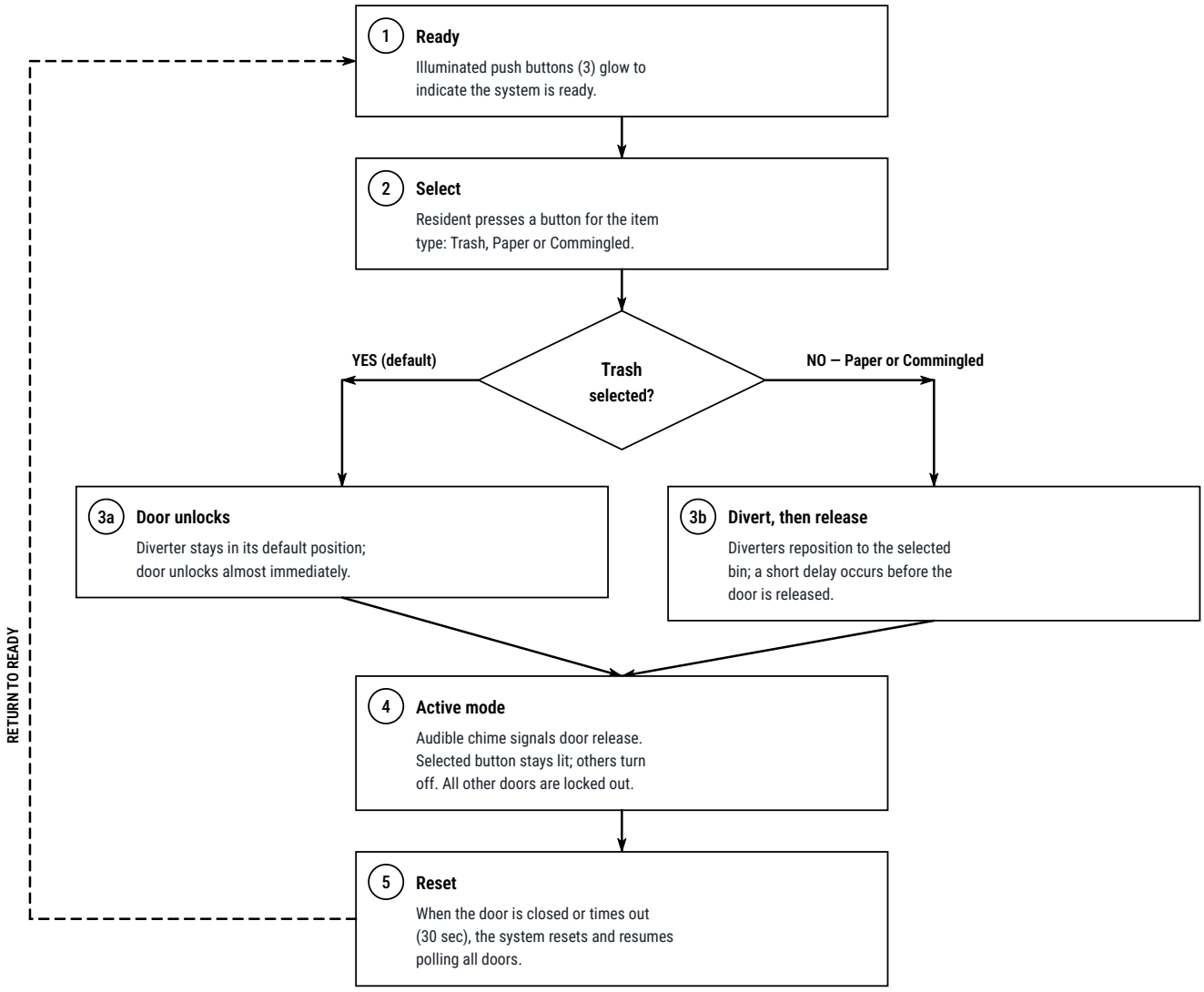

EXCEPTIONS & PROTECTION

- Door remains open — the system enters default mode for that door only.
- Door not fully closed — push buttons blink to signal a door malfunction.
- Bin missing or full — sensors trigger visual and audible alarms; full bins are bypassed and the default is used.
- Compactor full — diverter movement is prevented to protect the actuator.

INTAKE DOOR PUSH-BUTTON PANEL

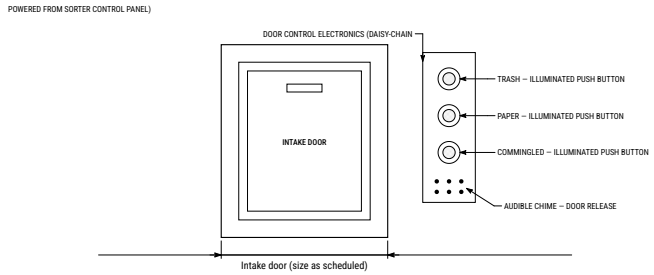

Buttons glow to indicate readiness; the selected button stays lit during processing; blinking buttons signal a door malfunction.

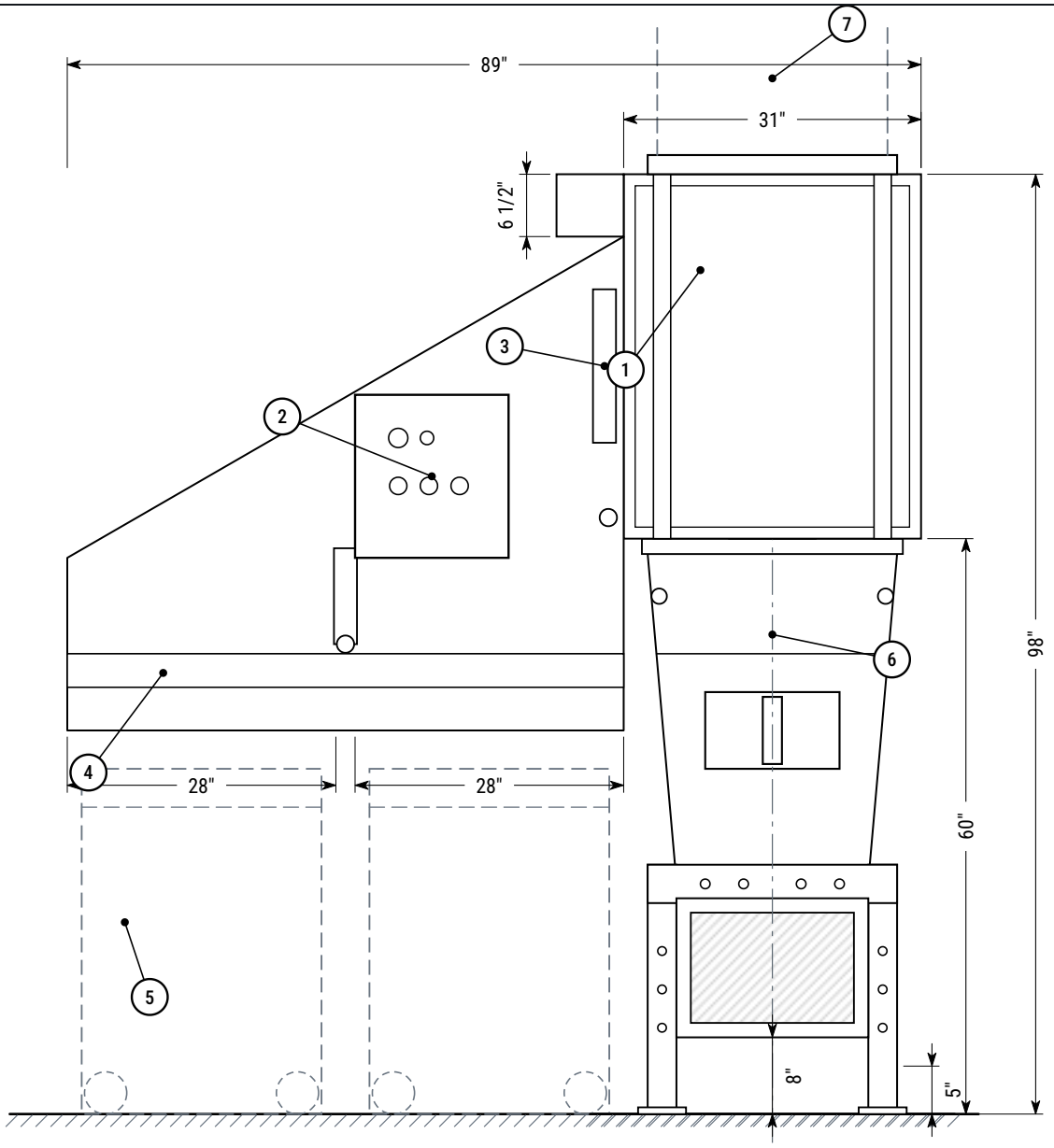

FRONT ELEVATION

Viewed at compactor discharge nozzle

1. Sorter / diverter body
2. Sorter control panel
3. Linear actuators — diverter gates (2)
4. Bin enclosure
5. Recycling bins (2, shown phantom)
6. Compactor
7. Building chute (shown phantom)

NOTES

1. All dimensions in inches. Do not scale drawing.
2. Shown mounted on a compactor with hopper height set at 60". Compactor height is adjusted by the hopper height to suit the sorter and field conditions.
3. Bin side may be left or right of the compactor (shown left).
4. Undimensioned features are shown for identification and are proportional only.

FURNISHED & INSTALLED BY	DRAWING TITLE	MODEL	SCALE	SHEET
SUPERIOR CHUTES & Compactors Installations, Inc. **Mfg: Chutes Enterprises** Office: 774 Manor Rd, Staten Island, NY Shop: 30 N 15th St, East Orange, NJ	**Front Elevation** Tri-Sorter mounted on compactor — general arrangement	**Tri-Sorter** UNITS **Inches**	**NTS** DRAWN BY **SC&CI**	**D-1 of 2** STATUS **For Reference**

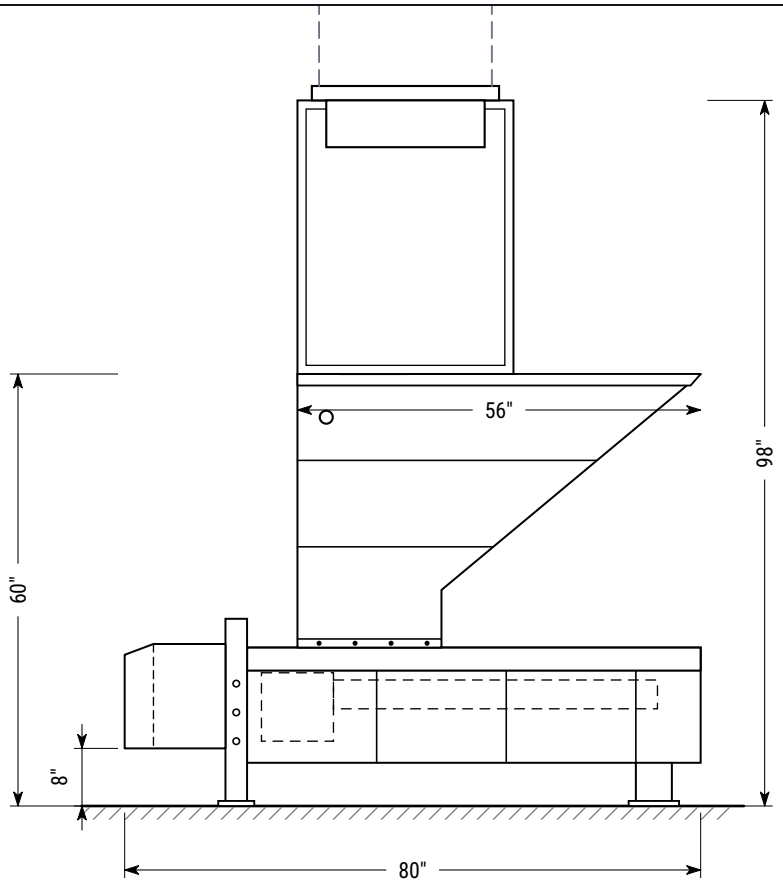

SIDE ELEVATION

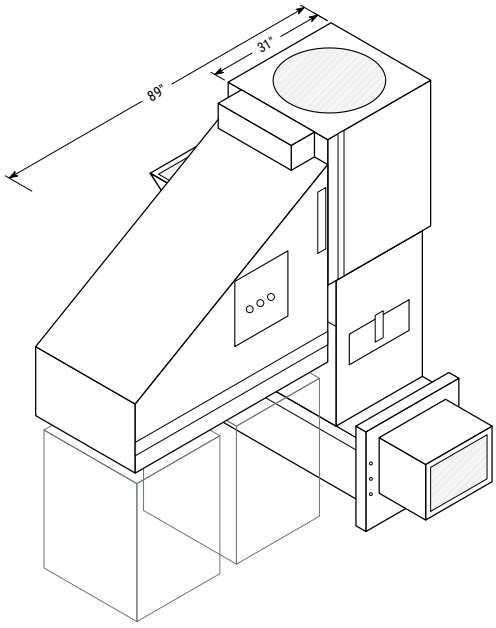

ISOMETRIC VIEW

FURNISHED & INSTALLED BY	DRAWING TITLE	MODEL	SCALE	SHEET
SUPERIOR CHUTES & Compactors Installations, Inc. **Mfg: Chutes Enterprises** Office: 774 Manor Rd, Staten Island, NY Shop: 30 N 15th St, East Orange, NJ	**Side Elevation & Isometric** Tri-Sorter mounted on compactor	**Tri-Sorter** UNITS **Inches**	**NTS** DRAWN BY **SC&CI**	**D-2 of 2** STATUS **For Reference**

INSTALLATION COORDINATION

- Building chute terminates at the sorter; sorter mounts on the compactor.
- Run power and communication to each intake-door floor (daisy chain) from the sorter control panel.
- Select the bin side (left or right) to suit the compactor room layout.
- Provide floor area for two recycling bins under the bin enclosure.

COMPATIBLE EQUIPMENT

- Superior Chutes CE-250 and CE-550 compactors
- Superior Chutes gravity trash chutes and intake doors

GUIDE SPECIFICATION — SHORT FORM

Suggested wording for project specifications (MasterFormat Section 11 82 00 — Facility Solid Waste Handling Equipment). Edit to suit project.

Manufacturer: Manufactured by Chutes Enterprises, East Orange, NJ; furnished and installed by Superior Chutes and Compactors Installations, Inc. Basis of design: Tri-Sorter System.

Type: Automated waste and recycling diverter sorting refuse into three categories: trash, paper and commingled recyclables, mounted above the compactor with the building chute terminating at the sorter.

Diverters: Two linear-actuator diverter gates; default position trash; full bins bypassed; diverter movement prevented when the compactor is full.

Sensors: Bin presence and fullness sensing with visual and audible alarms.

Intake doors: Installed every 10 to 17 vertical feet; each with control electronics, three illuminated push buttons and audible release chime; daisy-chain wired for power and communication from the sorter control panel.

Controls: Centralized control panel at the sorter with logic handling, status polling, request sequencing, door lock-out during processing, 30-second door time-out and visual/audible diagnostics.

Size: 89" overall width; 31" sorter width; 98" overall height with a 60" compactor; two 28" bin bays.

GENERAL ARRANGEMENT — OVERALL DIMENSIONS

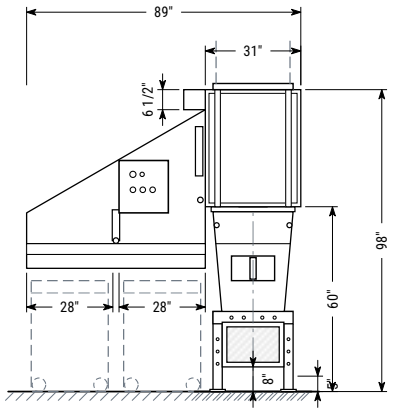

FRONT ELEVATION

COMPANY
Superior Chutes and Compactors Installations, Inc.
Mfg: Chutes Enterprises

OFFICE
774 Manor Rd, Suite 207
Staten Island, NY 10314

SHOP
30 N 15th Street
East Orange, NJ 07017

PHONE & EMAIL
Office 718-494-2247
Cell 917-701-3268 · Fax 718-494-2257
chutesenterprises@gmail.com

As part of ongoing product improvements, we reserve the right to change specifications at any time without notice.