PRODUCT BROCHURE & STANDARD SPECIFICATIONS

Gravity Chutes & Equipment

Trash and linen chutes, intake doors, compactors and recycling sorters

ABOUT SUPERIOR CHUTES

Superior Chutes and Compactors Installations, Inc. installs complete waste and soiled-linen chute systems. With our factory in East Orange, NJ and offices in New York City, we serve customers directly and through a national network of experienced distributors.

Our designers, fabricators and field personnel are supervised by managers with over 25 years of experience in every one of these fields. We continually update our design lines, adding and redesigning products to partially or completely replace systems and products no longer made by other manufacturers.

WHAT WE PROVIDE

- Gravity trash and linen chutes — 24" diameter standard, other sizes available
- Fire-rated intake doors — 1 1/2 hour UL Label "B"
- Discharge outlets, roof vents and louvers
- CE-250, CE-550 and CE-CP compactors and containers
- Bi-Sorter and Tri-Sorter recycling systems
- Washdown / sanitizing units, interlocks and accessories

24"
STANDARD CHUTE DIAMETER

1½ hr
UL LABEL "B" DOORS

NFPA 82
DESIGN BASIS

25+ yrs
MANAGEMENT EXPERIENCE

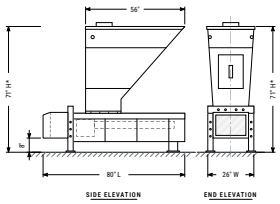

Compactors

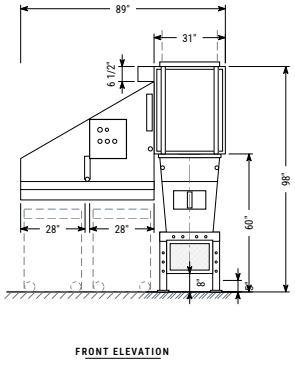

Recycling Sorters

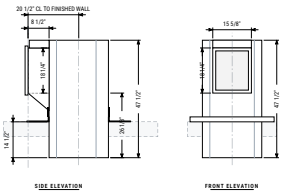

Chutes & Intakes

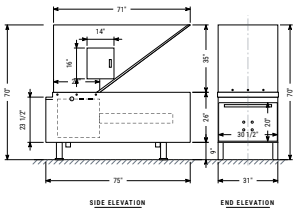

Container Packers

COMPANY
Superior Chutes and Compactors Installations, Inc.
Mfg: Chutes Enterprises

OFFICE
774 Manor Rd, Suite 207
Staten Island, NY 10314

SHOP
30 N 15th Street
East Orange, NJ 07017

PHONE & EMAIL
Office 718-494-2247
Cell 917-701-3268 · Fax 718-494-2257
chutesenterprises@gmail.com

NOTES

1. Schematic — not to scale. Floor count and heights per project.
2. Chute shaft fully factory-assembled; vertical seams lapped and welded; horizontal seams slip-jointed.
3. Chute shaft enclosure and firestopping by others.
4. Designed and manufactured to comply with the latest NFPA 82 and national building codes.

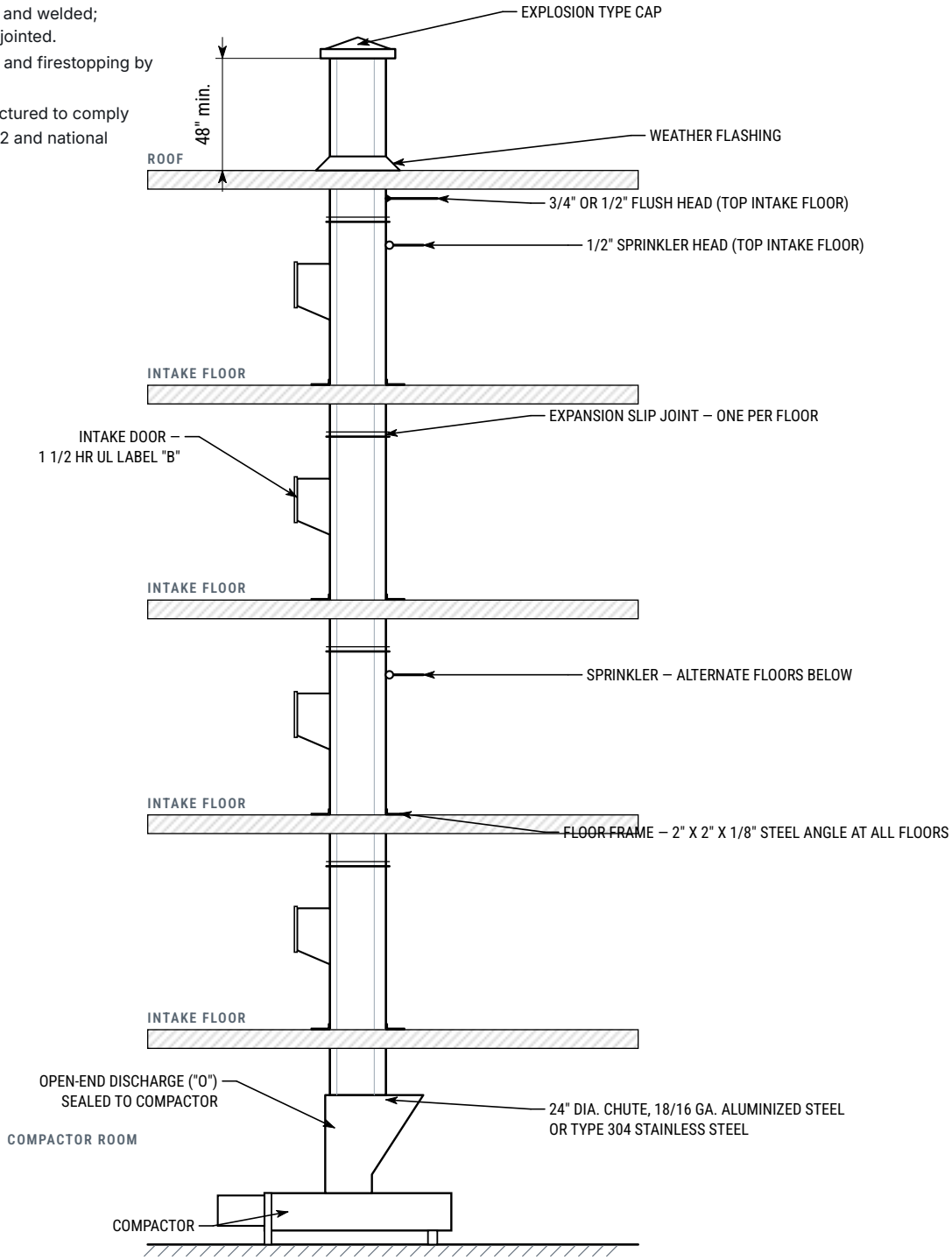

FURNISHED & INSTALLED BY	DRAWING TITLE	MODEL	SCALE	SHEET
SUPERIOR CHUTES & Compactors Installations, Inc. **Mfg: Chutes Enterprises** Office: 774 Manor Rd, Staten Island, NY Shop: 30 N 15th St, East Orange, NJ	**Typical Chute Riser** Typical trash chute elevation — roof to compactor	**24" Gravity Chute** UNITS **Inches**	**NTS** DRAWN BY **SC&CI**	**D-1 of 2** STATUS **For Reference**

Recommended Standard Specifications

Our gravity chutes are designed and manufactured to comply with the latest NFPA 82 and national building codes. The specifications below describe 24" diameter chutes, the standard of the industry; other sizes are available to meet particular project needs. (MasterFormat Section 14 91 00 — Facility Chutes.)

1. CHUTE SHAFT

- Trash or linen chute shall be 24" diameter, fabricated of 18/16 U.S. gauge aluminized steel or type 304 stainless steel.
- Shaft fully factory-assembled, with all vertical seams lapped and welded and all horizontal seams slip-jointed, with one expansion slip joint per floor.
- Provide 2" x 2" x 1/8" steel angle support shaft frame at all floors.
- Provide each chute at the top intake floor with a 3/4" or 1/2" flush head and a 1/2" sprinkler head, with additional sprinklers at alternate floors below.

2. INTAKE DOORS

- **Trash chutes:** 1518-BH, 1818-BH or 1215-BH bottom-hinged, or 1515-SH, 1518-SH, 2020-SH or 2121-SH side-hinged doors, to fulfill the particular need.
- **Linen chutes:** 1818-SH, 1518-SH, 2020-SH or 2121-SH side-hinged, or 1515-BH, 1818-BH or 2020-BH bottom-hinged doors.
- Doors carry the 1 1/2 hour Underwriters Laboratories Label "B" fire rating.

3. DISCHARGE OUTLET

- **"O" — Open end:** no door required; chute is connected and sealed to the compactor.
- **"R" — Rolling inclined outlet door**, held open with a 165°F UL fusible link.
- **"RB" — Rolling inclined outlet door, "B" construction**, held open with a 165°F UL fusible link.
- **"THT" — Top-hinged door and box**, for use where there is no compactor.
- **"THL" — Top-hinged linen chute door and slow-down box.**

4. TOP VENTING

- **Option A:** chute extends full size through the roof with weather flashing, continuing at least 48" above the roof, and terminates with an explosion type cap.
- **Option B:** chute extends full size through the roof, continuing at least 96" above the roof, where it turns 90° and terminates with a 24" x 24" side explosion type louver. Chute shaft above the roof shall be enclosed with a 2-hour rated shaft by others.
- Vent or louver assembly fabricated of 18 U.S. gauge aluminized steel or type 304 stainless steel, with all seams continuously welded / weatherproofed.

TYPICAL INTAKE SECTION

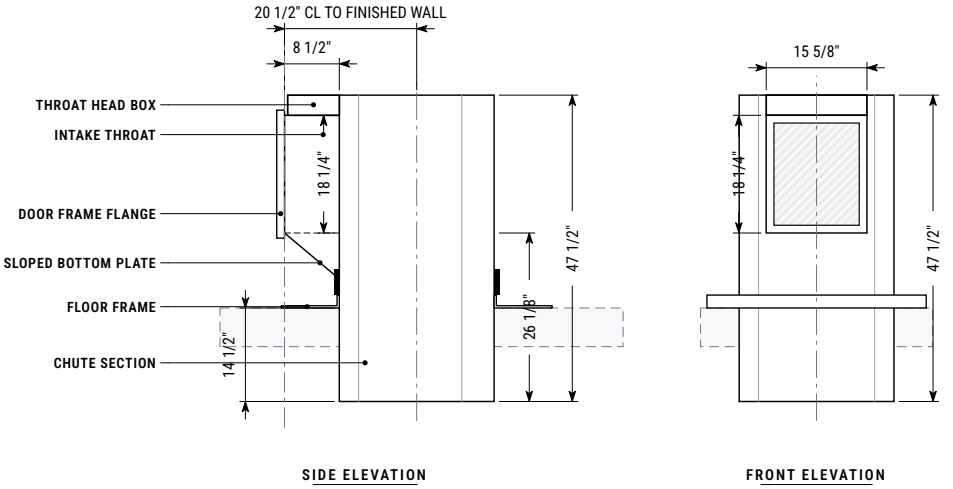

For specifiers. See sheet D-1 for the typical chute riser and sheet D-2 for outlet and roof-termination details. Door sizes and hinge types are listed on the Intake Doors page.

Intake Doors

Fire-rated stainless steel intake doors for trash, linen and access applications, in bottom-hinged (BH) and side-hinged (SH) configurations. Model numbers give the opening width then height in inches.

MODEL	HINGE	RECOMMENDED USE	SIZE
1215-BH	Bottom-hinged	Trash	12" W x 15" H
1215-SH	Side-hinged	Linen, Access	12" W x 15" H
1515-BH	Bottom-hinged	Linen, Access, Trash	15" W x 15" H
1515-SH	Side-hinged	Linen, Access	15" W x 15" H
1518-BH	Bottom-hinged	Linen, Trash	15" W x 18" H
1518-SH	Side-hinged	Linen, Trash	15" W x 18" H
1818-BH	Bottom-hinged	Linen, Trash	18" W x 18" H
1818-SH	Side-hinged	Linen, Trash	18" W x 18" H
2020-BH	Bottom-hinged	Linen, Trash	20" W x 20" H
2020-SH	Side-hinged	Linen, Trash, Access	20" W x 20" H
1821-BH	Bottom-hinged	Linen, Trash	21" W x 18" H
2121-BH	Bottom-hinged	Linen, Trash	21" W x 21" H
2121-SH	Side-hinged	Linen, Trash, Access	21" W x 21" H
2424-BH	Bottom-hinged	Linen, Trash	24" W x 24" H
2424-SH	Side-hinged	Linen, Trash, Access	24" W x 24" H

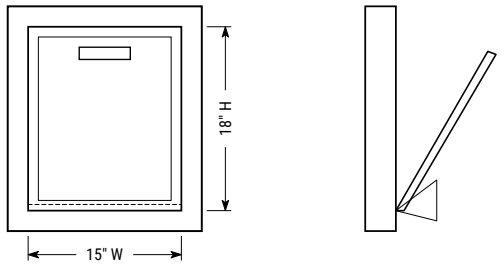

Bottom-Hinged (BH)
Front elevation and section — 1518-BH shown

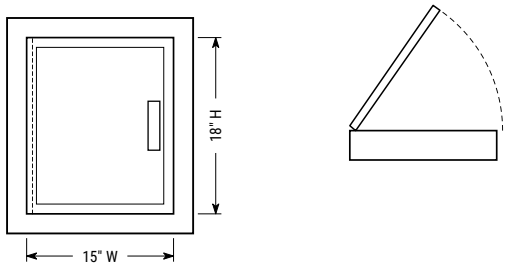

Side-Hinged (SH)
Front elevation and plan swing — 1518-SH shown

FIRE RATING

- Our fire-rated doors meet current building and fire codes as well as architectural requirements.
- Doors are fire rated and carry the 1 1/2 hour "B" label; temperature rise 650°F maximum at 30 minutes.
- Underwriters Laboratories test #R15927, approved for masonry and/or non-masonry construction type wall enclosures.
- Doors meet the requirements of the New York City Materials and Equipment Acceptance Division, New York Board of Standards and Appeals 1 1/2 hour "B" rating, NYC MEA# 206-96-M.

OUTLET DOORS

- Underwriters Laboratories does not offer a test, label or rating for horizontal chute type outlet doors. We still offer and manufacture the "RB" door under the fire rating / design requirements.
- Our "TH" fire-rated doors meet current building and fire codes, carry the 1 1/2 hour "B" rating (temperature rise 650°F maximum at 30 minutes, UL test #R15927) and meet NYC MEA# 206-96-M.

DISCHARGE OUTLETS

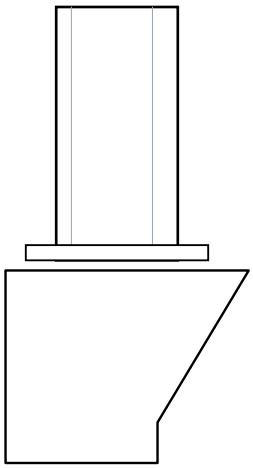

OPEN END — "O"
Chute connected and sealed to the compactor; no door

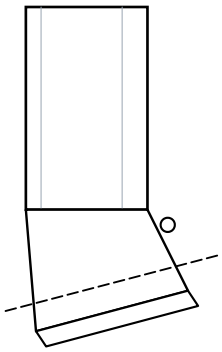

ROLLING INCLINED — "R" / "RB"
Rolling inclined door held open with 165°F UL fusible link

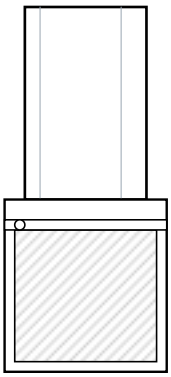

TOP-HINGED TRASH — "THT"
Top-hinged door and box — where there is no compactor

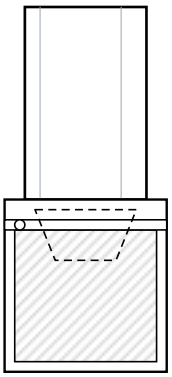

TOP-HINGED LINEN — "THL"
Top-hinged linen chute door and slow-down box

TOP VENTING

NOTES

1. Schematic — not to scale.
2. Fusible links: 165°F, UL listed.
3. Vent / louver: 18 U.S. gauge aluminized steel or type 304 stainless steel; seams continuously welded / weatherproofed.

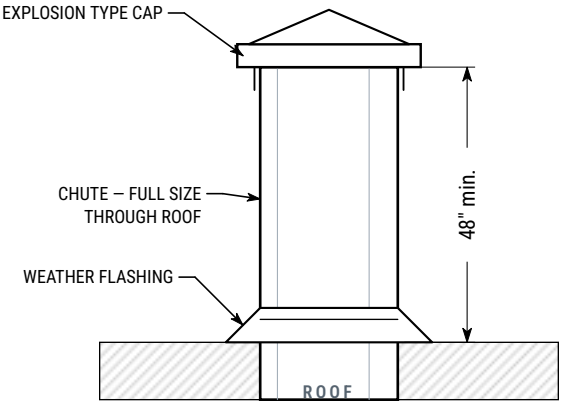

OPTION A — EXPLOSION CAP

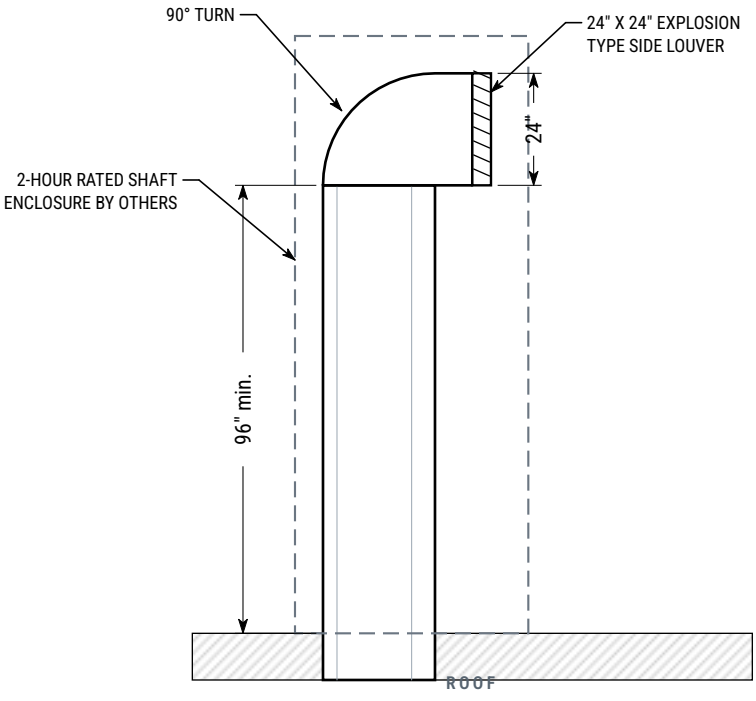

OPTION B — SIDE LOUVER

FURNISHED & INSTALLED BY	DRAWING TITLE	MODEL	SCALE	SHEET
SUPERIOR CHUTES & Compactors Installations, Inc. **Mfg: Chutes Enterprises** Office: 774 Manor Rd, Staten Island, NY Shop: 30 N 15th St, East Orange, NJ	**Outlets & Top Venting** Outlet types O, R/RB, THT, THL; roof termination options	**24" Gravity Chute** UNITS **Inches**	**NTS** DRAWN BY **SC&CI**	**D-2 of 2** STATUS **For Reference**

Optional Equipment

- **ADSU washdown / sanitizing unit:** a flush head is provided above the top intake door; a hot water line with a valve can be connected to periodically flush down the shaft. As an option, a disinfectant siphon unit with a one-gallon tank and an access door can be supplied.
- **Interlock system:** intake doors can be equipped with an integral interlock system to enforce single use of the intake doors. The interlock can be expanded to a single-stage recycling system.
- **Rubber baffles:** intake doors can be provided with back rubber baffles to prevent loose, dry particles in the shaft from blowing out when the door is open.
- **Sound dampening:** chute can be factory-coated with sound-dampening coating sprayed on the outside of the shaft.
- **Insulation and rub pads:** insulation and floor-frame insulation rub pads reduce vibration and the high-pitch noise of solids bouncing down the shaft.

RECYCLING TRASH CHUTES

Our single- or multiple-stage recycling chute systems are single-shaft chutes with a double or multiple-function electric interlock system. Making a selection sends household trash to the compactor or container; selecting a recycling option electronically diverts the recyclables to the container for that type of material. Diversion is accomplished by a diverter chamber at the bottom of the chute. Installation must be performed by factory-trained personnel. See the Bi-Sorter and Tri-Sorter specification sheets.

SPECIALTY CHUTES

Over the years we have manufactured a wide range of specialty, one-of-a-kind chutes, including money chutes for banks, stores and casinos; bread chutes for bakeries; chutes for the food industry; coal, cement and grain chutes; and sidewalk chutes / slides.

INSTALLATION

Erecting our chutes requires two installers and a few standard tools. Shaft sections are pre-labeled by sequence and floor; after distribution, the shaft is stacked, positioned and aligned / leveled. Intake and outlet doors are shipped separately and can be installed after the chute is enclosed with walls, preventing damage to the stainless steel pre-polished finish during construction.

GUARANTEE

We guarantee our chutes against defective materials or workmanship for a period of one year, provided all components are properly used and maintained.

> Firestopping, fire safing, smoke seals and chute shaft enclosures are by others.



INTAKE SECTIONS
Factory-built intake throats ready for UL-labeled doors.



CHUTE IN SHAFT
Chute and intake throat set in the shaft before enclosure.



OUR CREWS
Installers stack, align and secure each section floor to floor.

In the Field — Compactors & Containers

Installed Superior Chutes equipment, manufactured by Chutes Enterprises and set by our own crews.



COMPACTOR + POWER UNIT
Chute-fed compactor and remote hydraulic power unit in a finished refuse room.



COMPACT FOOTPRINT
Hopper, chassis and power unit arranged to fit tight compactor rooms.



AUTOMATIC BAGGING
Photo-eye activated compaction straight to the bag tray, unattended.



CE-CP CONTAINER PACKER
Packs directly into a 2-yard container for front- or rear-load pickup.



2-YARD CONTAINER
Heavy-duty container with two-piece lid and casters.

Built and installed by one team. Equipment is manufactured by Chutes Enterprises at our East Orange, NJ shop and installed by Superior Chutes crews — one point of responsibility from shop drawings to start-up.

In the Field — Recycling Sorters & Roof Vents

Sorters mount on the compactor; chutes extend full size through the roof.

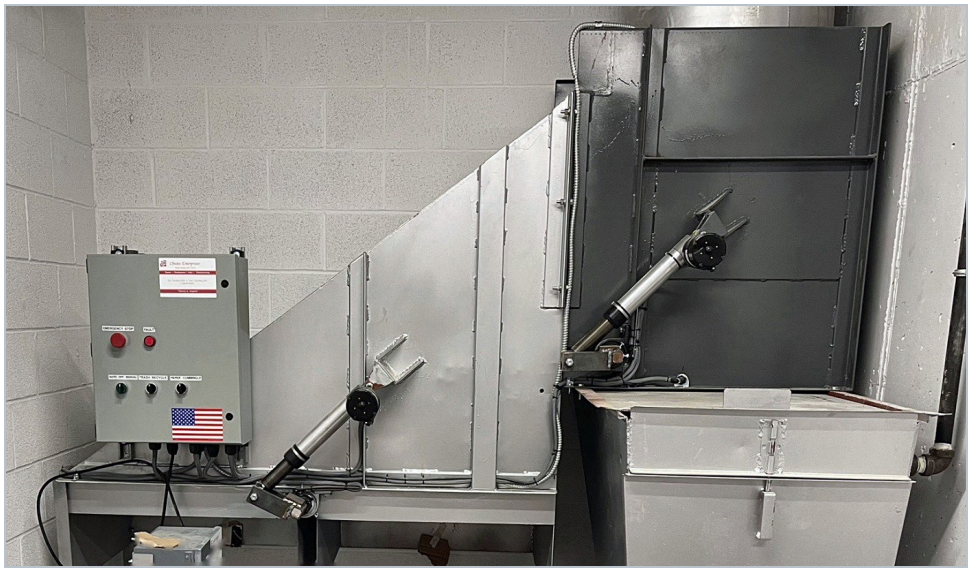

TRI-SORTER
Two linear-actuator diverters route trash, paper and commingled from one chute; control panel at the sorter.



BI-SORTER
Trash and recycling from a single chute, mounted on the compactor.



ROOF VENT
Chute extended full size through the roof to the vent cap.



MULTIPLE CHUTES
Three chutes terminated on a single flashed curb.



TWIN VENTS
Paired chute vents for trash and recycling chutes.

Chute-Fed Compactors — CE-250 & CE-550

Fully automatic, photo-electric-activated bagger compactors built by Chutes Enterprises. Discharge to single bags, continuous tube bagging (up to 10 bags unattended) or 1 to 2 yard front- or rear-load containers.

CE-250

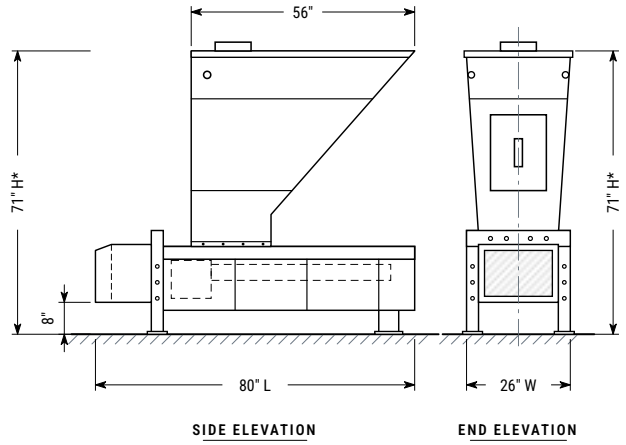

CE-550

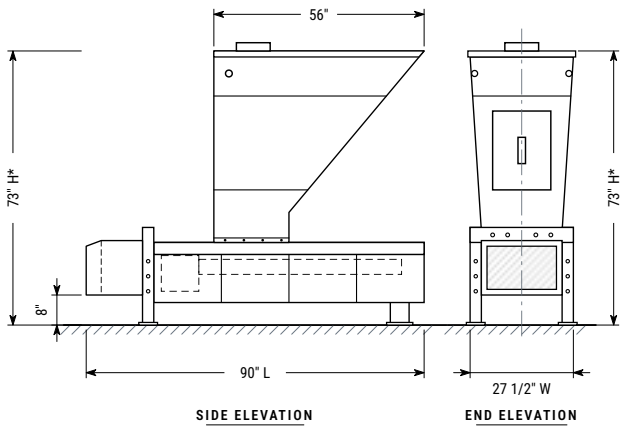

SPECIFICATION	CE-250	CE-550
Recommended duty	Up to approx. 250 apartments	Up to approx. 500 apartments
Maximum capacity	11 cu. yd/hr	15 cu. yd/hr
Cycle time	27 sec	30 sec
Compaction / volume	4:1 ratio	0.1286 cu. yd/cycle
Ram force	38,000 lbs @ 3,000 psi	58,905 lbs
Overall (H* x W x L)	71" x 26" x 80"	73" x 27 1/2" x 90"
Hopper top	24" x 56"	25 1/2" x 56"
Motor	3 HP, 1750 RPM, 208/230 V, 3-ph	5 HP TEFC, 3450 RPM, 208/230 V, 3-ph
Controls	115 V, NEMA 1 (NEMA 12 opt.)	115 V PLC with HMI display
Pump	5.5 GPM two-stage gear	11 GPM two-stage gear
Cylinder	4" bore, 2" rod, 24" stroke	5" bore, 28" stroke
Oil tank	12.5 gal	13 gal
Floor	1/4" AR-400 over 1/4" (1/2" total)	1/4" Brinell 400 over 1/4" (1/2" total)
Ram plate	3/4" full face, reinforced	1" full face, reinforced
Hopper impact plate	1/4"	1/4" or 3/8"

* Height may be adjusted by hopper height to suit field conditions or a recycling diverter. Full data and dimensioned drawings: Sheets 01 and 02.

Container Packer, Hand-Fed Compactor & Containers

CE-CP CONTAINER PACKER — SHEET 03

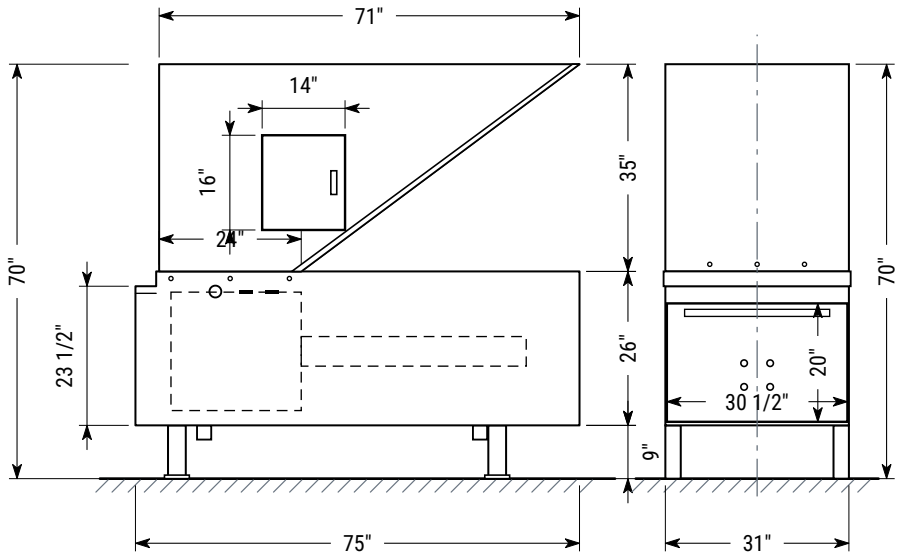

SIDE ELEVATION

END ELEVATION

Rating	0.31 cu. yd
Cycle time	32.4 sec
Displacement	34.4 cu. yd/hr
Overall	31" W x 75" L x 70" H
Top opening	31" W x 71" L

Weight	1,600 lbs
Motor	3 HP (5 HP opt.), 208/230/460 V, 3-ph, 20 A
Pump / tank	2-stage 11 GPM / 12 gal
Controller	Lovato programmable, internal HMI

HAND-FED COMPACTOR — SHEET 07

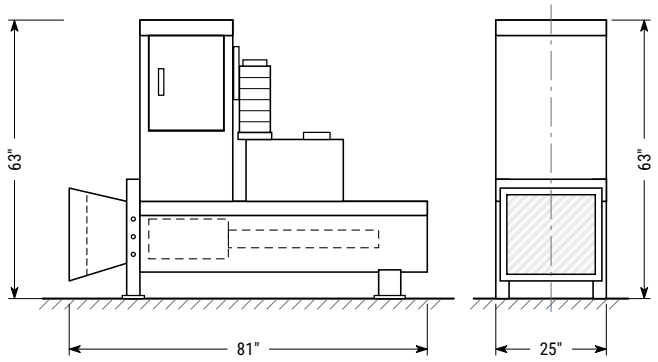

SIDE ELEVATION

END ELEVATION

Overall	63" H x 81" L x 25" W
Loading	Hinged loading door
Power unit	Chassis-mounted

2-YARD CONTAINER — SHEET 06

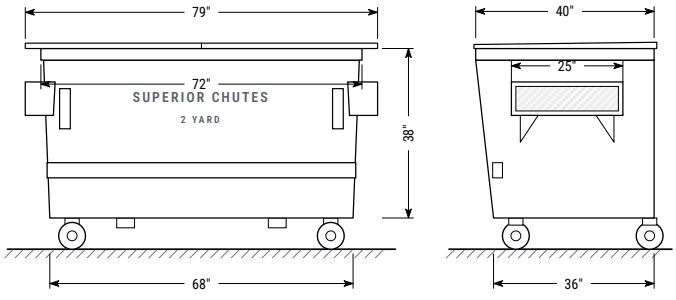

FRONT ELEVATION

SIDE ELEVATION

Capacity	2 cu. yd
Configuration	Front-load or rear-load
Lid	79" overall, two-piece
Body	72" top / 68" bottom x 38" H
Depth	40" top / 36" bottom
Mobility	Four casters

Recycling Sorters — Bi-Sorter & Tri-Sorter

Automated diverters mounted on the compactor, with the building chute terminating at the sorter. Default position is trash; full bins are bypassed and a full compactor locks the diverter to protect the actuator. Doors are daisy-chain wired from the sorter control panel.

BI-SORTER — SHEET 04

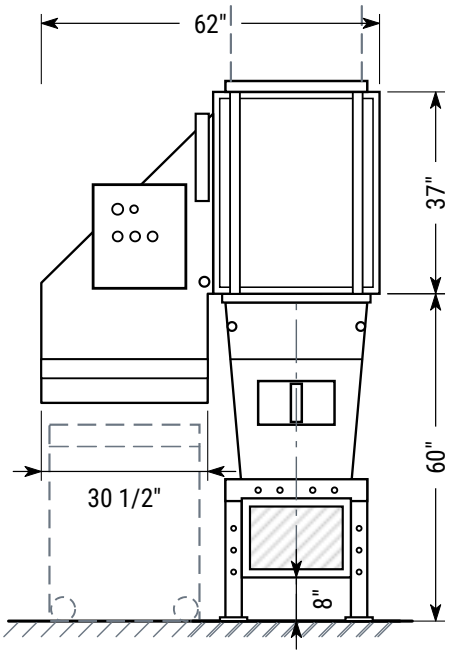

FRONT ELEVATION

TRI-SORTER — SHEET 05

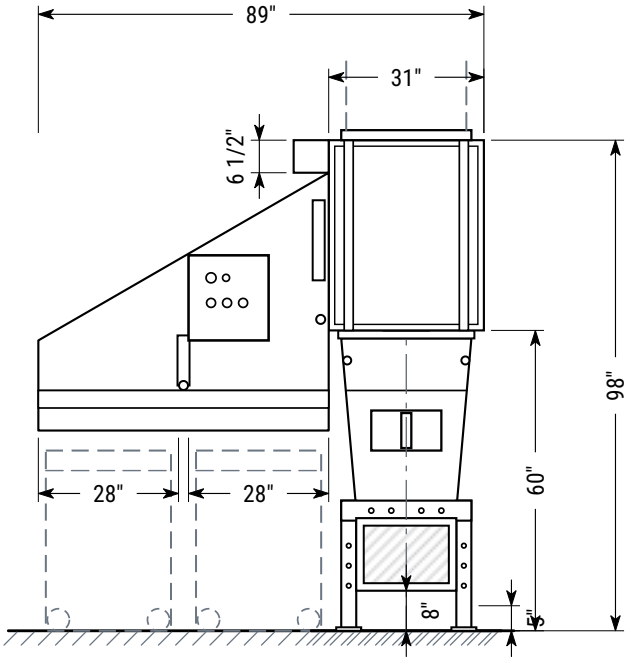

FRONT ELEVATION

SPECIFICATION	BI-SORTER	TRI-SORTER
Waste streams	2 — trash + recycling	3 — trash, paper, commingled
Diverter gates	1 linear actuator	2 linear actuators
Door push buttons	2 per door	3 per door
Overall width	62"	89"
Sorter size	30" deep x 37" high	31" wide
Overall height (60" compactor)	—	98"
Bin bays	30 1/2"	28" + 28"
Door spacing	10 to 17 vertical ft	10 to 17 vertical ft
Door time-out	30 sec	30 sec

Our Products

Each product has its own specification sheet with full technical data and dimensioned drawings.

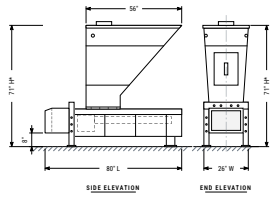

CE-250 Compactor

Chute-fed bagger for up to approx. 250 apartments

SHEET 01

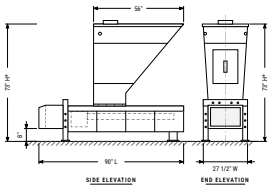

CE-550 Compactor

Chute-fed bagger for up to approx. 500 apartments

SHEET 02

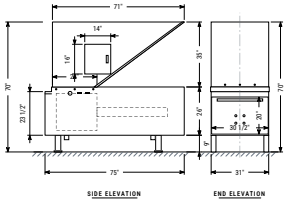

CE-CP Container Packer

Compacts directly into a 2-yard container

SHEET 03

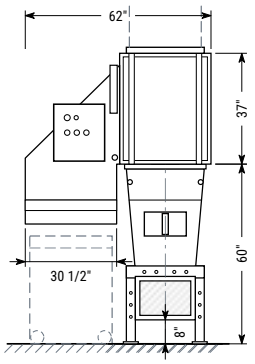

Bi-Sorter System

Two-stream sorting from a single chute

SHEET 04

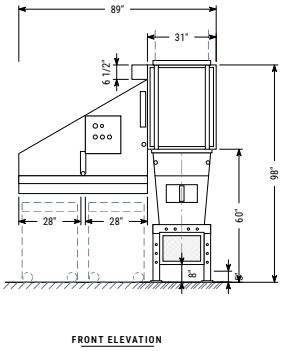

Tri-Sorter System

Three-stream sorting from a single chute

SHEET 05

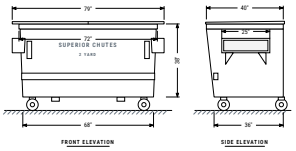

2-Yard Container

Front-load or rear-load

SHEET 06

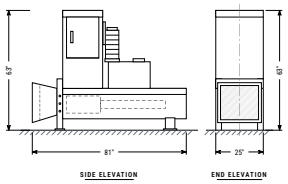

Hand-Fed Compactor

Hand-loaded, on-board power unit

SHEET 07

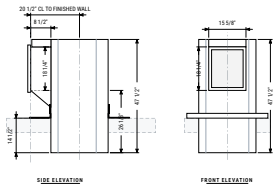

Chute Intake Section

Chute section with intake throat

SHEET 08

Design support
Shop drawings, chute section schedules and submittals for each project.

Fabrication
Chutes and compactors built at our factory by Chutes Enterprises.

Installation
Factory-trained crews erect chutes, set compactors and commission sorters.

COMPANY

Superior Chutes and Compactors Installations, Inc.
Mfg: Chutes Enterprises

OFFICE

774 Manor Rd, Suite 207
Staten Island, NY 10314

SHOP

30 N 15th Street
East Orange, NJ 07017

PHONE & EMAIL

Office 718-494-2247
Cell 917-701-3268 · Fax 718-494-2257
chutesenterprises@gmail.com

As part of ongoing product improvements, we reserve the right to change specifications at any time without notice.