SELF-CONTAINED COMPACTOR

Hand-Fed Compactor

Hand-loaded compactor with on-board hydraulic power unit

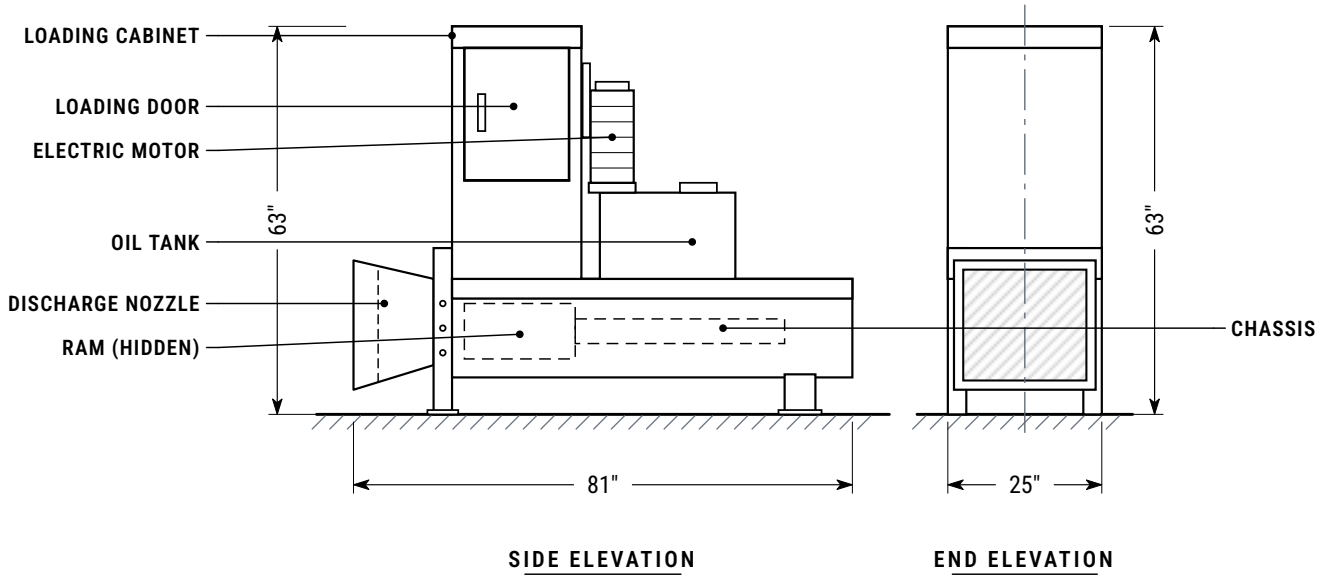

General arrangement — all dimensions in inches. See drawing sheets for complete dimensions.

OVERVIEW

The Superior Chutes Hand-Fed Compactor is loaded by hand through a hinged loading door in its upright loading cabinet. The hydraulic power unit — motor, oil tank and control box — is mounted directly on the compactor chassis, so no separate power unit location is needed. Compacted refuse is discharged through the nozzle at the front of the machine.

KEY FEATURES

- Hinged loading door with handle on the loading cabinet
- On-board hydraulic power unit: electric motor, oil tank and control box on the chassis
- Nozzle flange frame doubles as the front legs
- Compact footprint: 81" long x 25" wide; 63" overall height
- Built by Chutes Enterprises, 25+ years manufacturing compactors

63"	81"	25"	On-board
OVERALL HEIGHT	OVERALL LENGTH	WIDTH	POWER UNIT

COMPANY
Superior Chutes and Compactors Installations, Inc.
Mfg: Chutes Enterprises

OFFICE
774 Manor Rd, Suite 207
Staten Island, NY 10314

SHOP
30 N 15th Street
East Orange, NJ 07017

PHONE & EMAIL
Office 718-494-2247
Cell 917-701-3268 · Fax 718-494-2257
chutesenterprises@gmail.com

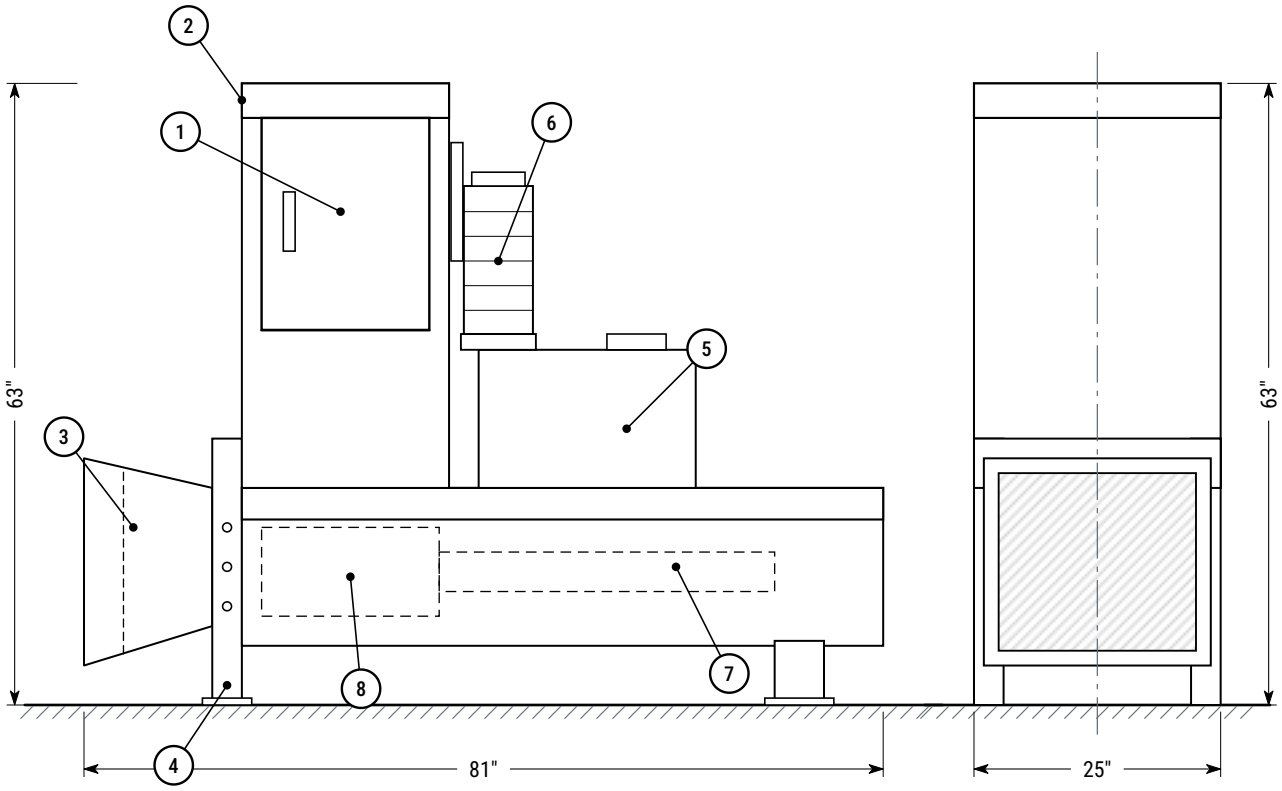

SIDE ELEVATION

END ELEVATION

Viewed at discharge nozzle

1. Loading door
2. Loading cabinet
3. Discharge nozzle
4. Nozzle flange / front legs
5. Oil tank
6. Electric motor
7. Chassis
8. Ram (hidden)

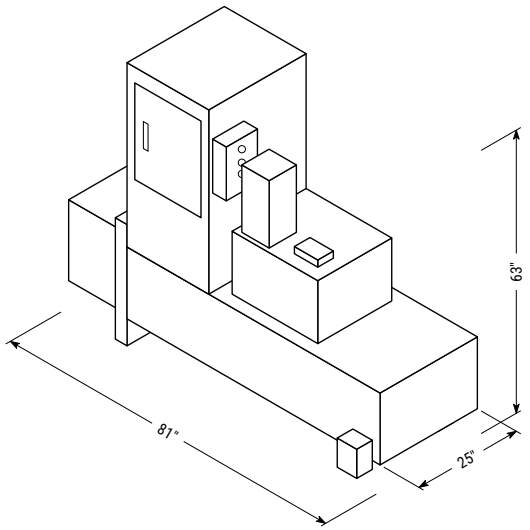

NOTES

1. All dimensions in inches. Do not scale drawing.
2. Overall 63" H x 81" L x 25" W.
3. Hydraulic power unit and controls are mounted on the compactor chassis.
4. Undimensioned features are shown for identification and are proportional only.

FURNISHED & INSTALLED BY	DRAWING TITLE	MODEL	SCALE	SHEET
SUPERIOR CHUTES & Compactors Installations, Inc. **Mfg: Chutes Enterprises** Office: 774 Manor Rd, Staten Island, NY Shop: 30 N 15th St, East Orange, NJ	**Elevations & Isometric** Hand-fed compactor — general arrangement	**Hand-Fed** UNITS **Inches**	**NTS** DRAWN BY **SC&CI**	**D-1 of 1** STATUS **For Reference**

Specifications

DIMENSIONS

Overall height	**63"**
Overall length	**81"**
Width	**25"**

CONFIGURATION

Loading	**Hand-fed through hinged loading door**
Power unit	**Mounted on compactor chassis**
Discharge	**Front nozzle**

INSTALLATION COORDINATION

- Provide clear access in front of the loading door for hand loading.
- Provide electrical service to the chassis-mounted control box per the manufacturer's submittal.
- Allow room at the discharge nozzle for bags or the selected container.

COMPATIBLE EQUIPMENT

- Superior Chutes 1 to 2 yard containers
- Superior Chutes CE-250 / CE-550 for chute-fed applications

GUIDE SPECIFICATION — SHORT FORM

Suggested wording for project specifications (MasterFormat Section 11 82 00 — Facility Solid Waste Handling Equipment). Edit to suit project.

Manufacturer: Manufactured by Chutes Enterprises, East Orange, NJ; furnished and installed by Superior Chutes and Compactors Installations, Inc. Basis of design: Hand-Fed Compactor.

Type: Hand-loaded compactor with hinged loading door and chassis-mounted hydraulic power unit and controls.

Size: Overall 63" H x 81" L x 25" W.

Data: Performance, electrical and hydraulic data per manufacturer's submittal.

GENERAL ARRANGEMENT — OVERALL DIMENSIONS

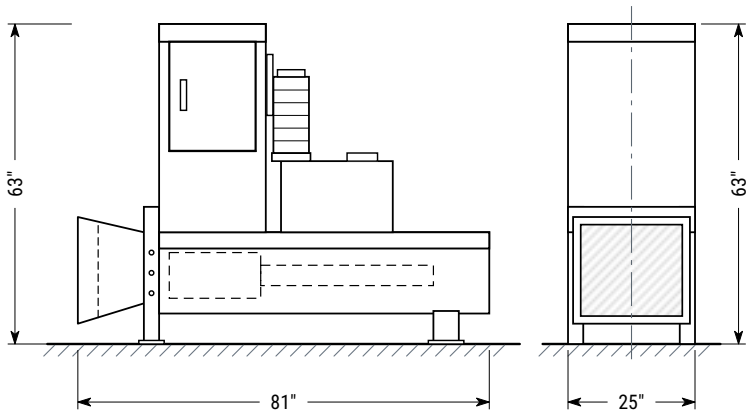

SIDE ELEVATION END ELEVATION

COMPANY
Superior Chutes and Compactors Installations, Inc.
Mfg: Chutes Enterprises

OFFICE
774 Manor Rd, Suite 207
Staten Island, NY 10314

SHOP
30 N 15th Street
East Orange, NJ 07017

PHONE & EMAIL
Office 718-494-2247
Cell 917-701-3268 · Fax 718-494-2257
chutesenterprises@gmail.com

As part of ongoing product improvements, we reserve the right to change specifications at any time without notice.