FACILITY CHUTES

Gravity Trash & Linen Chute

Factory-fabricated trash and linen chutes, NFPA 82

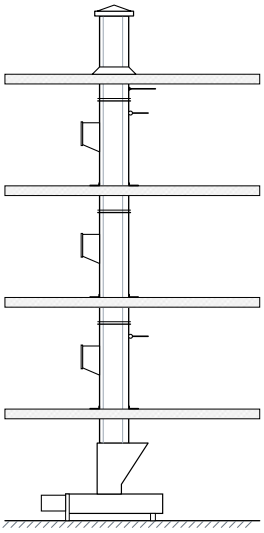

TYPICAL RISER

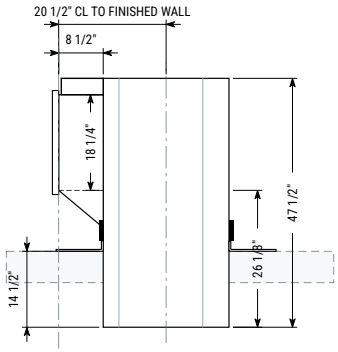

SIDE ELEVATION

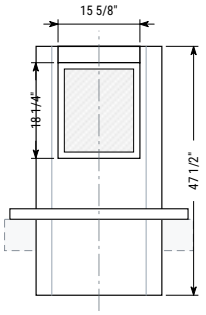

FRONT ELEVATION

Schematic — see drawing sheets and the Chute Intake Section sheet for dimensions.

OVERVIEW

Our gravity chutes are built in our own shop by Chutes Enterprises and installed by our own crews. Each shaft is factory-assembled, pre-labeled by sequence and floor, then stacked, aligned and leveled in the field. Intake doors are made to whatever size the building needs, and the chute is finished at the roof with an explosion cap or side louver and at the bottom with the outlet that suits the equipment below.

KEY FEATURES

- 24" diameter standard; other sizes to suit the project
- 18/16 U.S. gauge aluminized steel or type 304 stainless steel
- Vertical seams lapped and welded; one expansion slip joint per floor
- 2" x 2" x 1/8" steel angle floor frame at every floor
- UL Label "B" intake doors, custom-sized, bottom- or side-hinged
- Designed to the latest NFPA 82 and national building codes

24"	**NFPA 82**	**1 1/2 hr**	**1 yr**
STANDARD DIAMETER	DESIGN BASIS	UL LABEL "B" DOORS	GUARANTEE

COMPANY
Superior Chutes and Compactors Installations, Inc.
Mfg: Chutes Enterprises

OFFICE
774 Manor Rd, Suite 207
Staten Island, NY 10314

SHOP
30 N 15th Street
East Orange, NJ 07017

PHONE & EMAIL
Office 718-494-2247
Cell 917-701-3268 · Fax 718-494-2257
chutesenterprises@gmail.com

NOTES

1. Schematic — not to scale. Floor count and heights per project.
2. Chute shaft fully factory-assembled; vertical seams lapped and welded; horizontal seams slip-jointed.
3. Chute shaft enclosure and firestopping by others.
4. Designed and manufactured to comply with the latest NFPA 82 and national building codes.

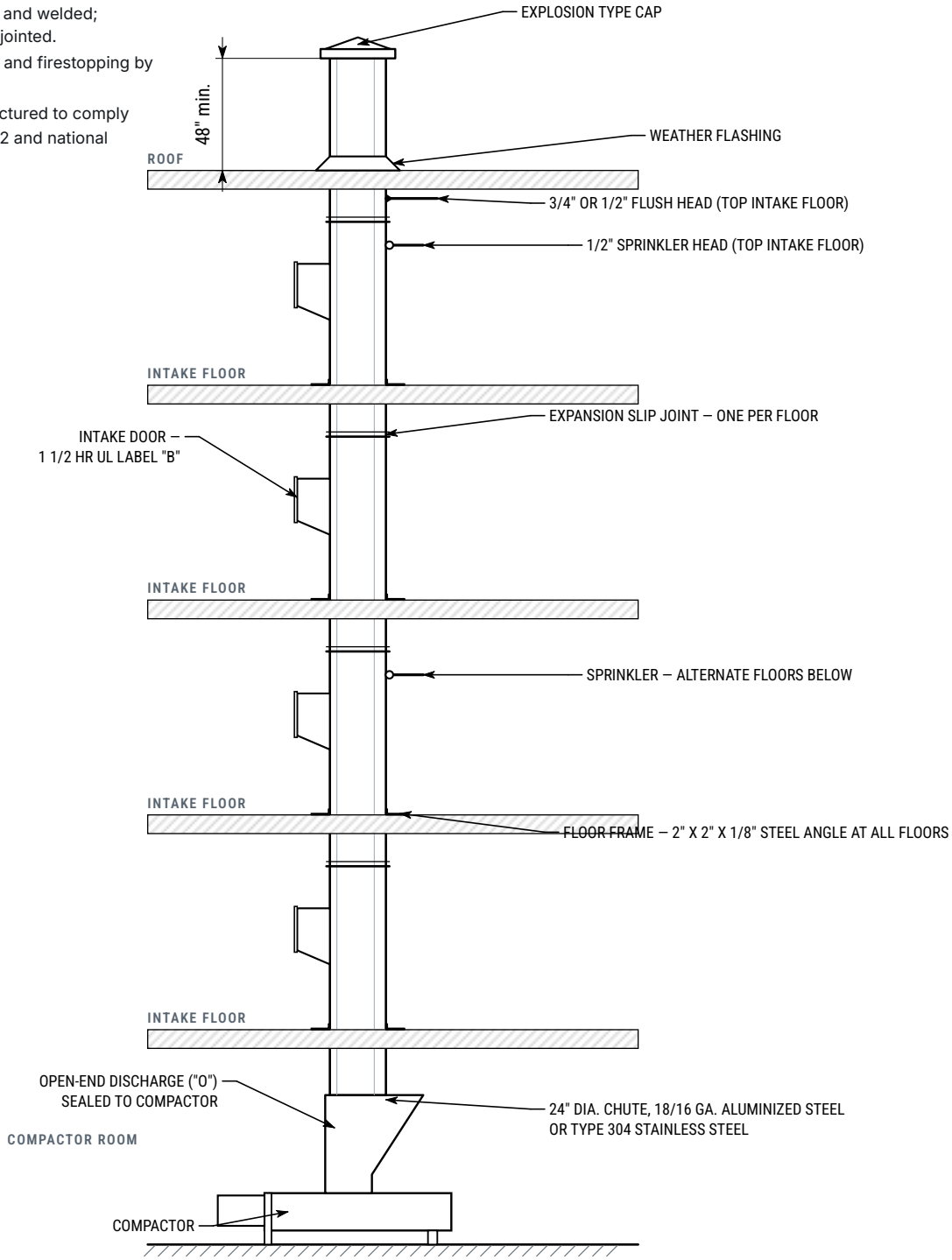

FURNISHED & INSTALLED BY	DRAWING TITLE	MODEL	SCALE	SHEET
SUPERIOR CHUTES & Compactors Installations, Inc. **Mfg: Chutes Enterprises** Office: 774 Manor Rd, Staten Island, NY Shop: 30 N 15th St, East Orange, NJ	**Typical Chute Riser** Typical trash chute elevation — roof to compactor	**24" Gravity Chute** UNITS **Inches**	**NTS** DRAWN BY **SC&CI**	**D-1 of 2** STATUS **For Reference**

DISCHARGE OUTLETS

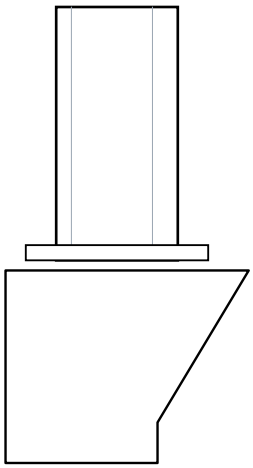

OPEN END — "O"
Chute connected and sealed to the compactor; no door

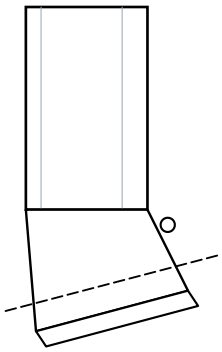

ROLLING INCLINED — "R" / "RB"
Rolling inclined door held open with 165°F UL fusible link

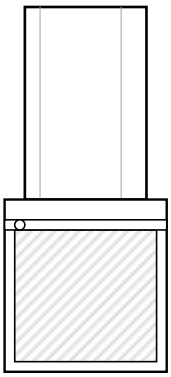

TOP-HINGED TRASH — "THT"
Top-hinged door and box — where there is no compactor

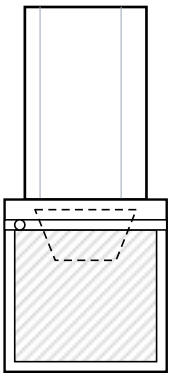

TOP-HINGED LINEN — "THL"
Top-hinged linen chute door and slow-down box

TOP VENTING

NOTES

1. Schematic — not to scale.
2. Fusible links: 165°F, UL listed.
3. Vent / louver: 18 U.S. gauge aluminized steel or type 304 stainless steel; seams continuously welded / weatherproofed.

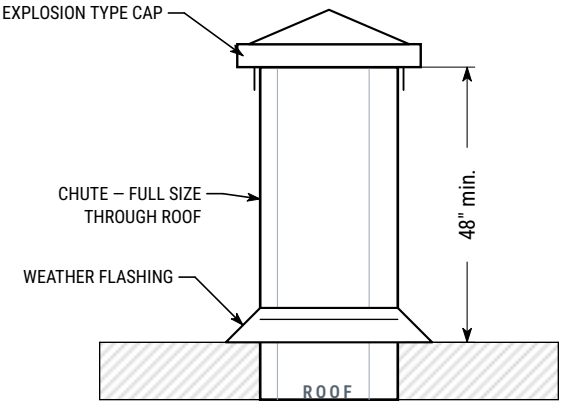

OPTION A — EXPLOSION CAP

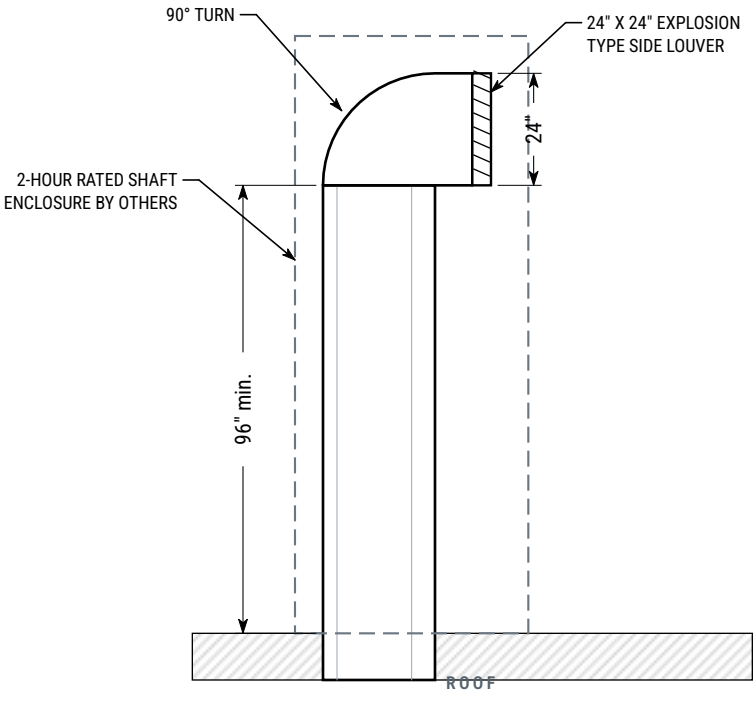

OPTION B — SIDE LOUVER

FURNISHED & INSTALLED BY	DRAWING TITLE	MODEL	SCALE	SHEET
SUPERIOR CHUTES & Compactors Installations, Inc. **Mfg: Chutes Enterprises** Office: 774 Manor Rd, Staten Island, NY Shop: 30 N 15th St, East Orange, NJ	**Outlets & Top Venting** Outlet types O, R/RB, THT, THL; roof termination options	**24" Gravity Chute** UNITS **Inches**	**NTS** DRAWN BY **SC&CI**	**D-2 of 2** STATUS **For Reference**

Specifications

CHUTE SHAFT

- 24" diameter standard; other sizes available.
- 18/16 U.S. gauge aluminized steel or type 304 stainless steel.
- Fully factory-assembled; vertical seams lapped and welded; horizontal seams slip-jointed; one expansion slip joint per floor.
- 2" x 2" x 1/8" steel angle floor frame at all floors.

INTAKE DOORS

- 1 1/2 hour Underwriters Laboratories Label "B".
- Bottom- or side-hinged; stainless steel.
- Made to the size each building needs — trash, linen and access doors.

OPTIONS

- **ADSU washdown / sanitizing unit** — flush head above the top intake door; optional disinfectant siphon unit with one-gallon tank and access door.
- **Interlock system** — enforces single use of the intake doors; expandable to single-stage recycling.
- **Rubber baffles** — keep loose, dry particles from blowing out when a door is open.
- **Sound dampening** — factory-sprayed coating on the outside of the shaft.
- **Insulation and rub pads** — reduce vibration and noise of solids in the shaft.

INSTALLATION COORDINATION

- Chute shaft enclosure, firestopping, fire safing and smoke seals by others.
- Sprinkler and washdown water connections by others.
- Intake and outlet doors ship separately and are installed after the shaft is enclosed, protecting the finish.
- Installation by two installers; sections pre-labeled by sequence and floor.

COMPATIBLE EQUIPMENT

- Superior Chutes intake sections (see Chute Intake Section sheet)
- CE-250 / CE-550 compactors and CE-CP container packer
- Bi-Sorter and Tri-Sorter recycling systems

GUIDE SPECIFICATION — SHORT FORM

Suggested wording for project specifications (MasterFormat Section 14 91 00 — Facility Chutes). Edit to suit project.

Manufacturer: Manufactured by Chutes Enterprises, East Orange, NJ; furnished and installed by Superior Chutes and Compactors Installations, Inc.

Chute: 24" diameter (or as scheduled), 18/16 U.S. gauge aluminized steel or type 304 stainless steel; fully factory-assembled; vertical seams lapped and welded, horizontal seams slip-jointed, one expansion slip joint per floor.

Floor frames: 2" x 2" x 1/8" steel angle support shaft frame at all floors.

Intake doors: 1 1/2 hour UL Label "B", bottom- or side-hinged, sized to suit each intake as scheduled.

Sprinklers: At the top intake floor provide a 3/4" or 1/2" flush head and a 1/2" sprinkler head; additional sprinklers at alternate floors below.

Discharge: Open end ("O") sealed to compactor, or "R", "RB", "THT" or "THL" outlet as scheduled.

Top venting: Option A — full size through roof, 48" min. above roof with explosion type cap; or Option B — 96" min. above roof turning 90° to a 24" x 24" side explosion louver (2-hour shaft above roof by others).

COMPANY	OFFICE	SHOP	PHONE & EMAIL
Superior Chutes and Compactors Installations, Inc. **Mfg: Chutes Enterprises**	**774 Manor Rd, Suite 207** Staten Island, NY 10314	**30 N 15th Street** East Orange, NJ 07017	Office 718-494-2247 Cell 917-701-3268 · Fax 718-494-2257 chutesenterprises@gmail.com

As part of ongoing product improvements, we reserve the right to change specifications at any time without notice.