GRAVITY CHUTE COMPONENT

Intake Chute Section

Factory-fabricated chute section with integral intake throat and floor frame

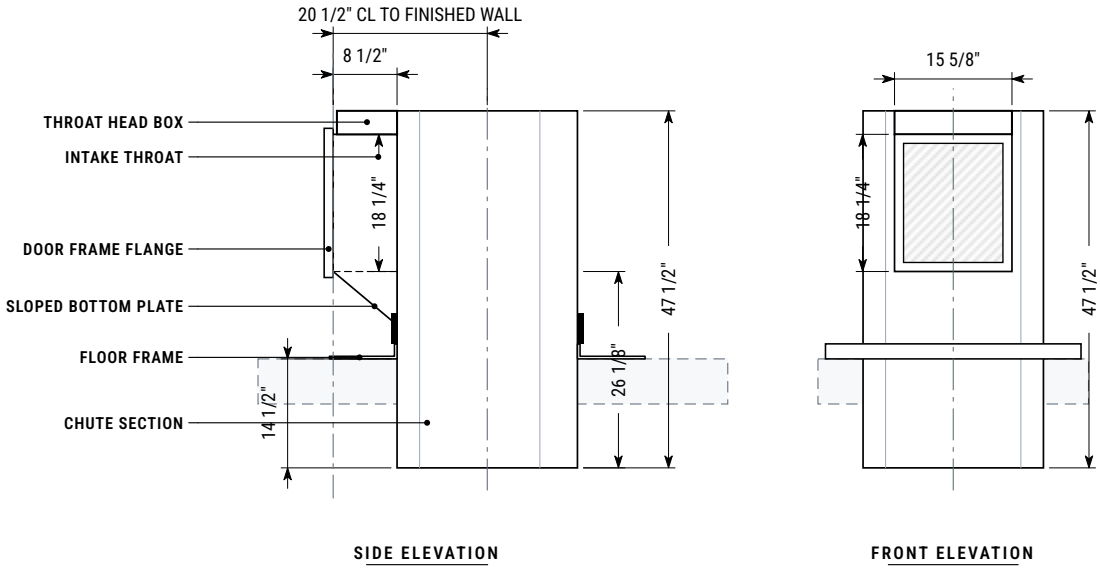

General arrangement — all dimensions in inches. See drawing sheets for complete dimensions.

OVERVIEW

The intake section is the chute section installed at each intake floor. It is factory-fabricated with an integral intake throat that receives the fire-rated intake door, and it is set through the floor on a steel-angle floor frame. Sections are pre-labeled by sequence and floor, and the shaft is stacked, positioned and aligned/leveled in the field.

KEY FEATURES

- Integral intake throat with 15 5/8" W x 18 1/4" H opening
- Intake face 8 1/2" from chute face — 20 1/2" from chute centerline to finished wall
- Section height 47 1/2"; throat begins 26 1/8" above the section bottom
- Section extends 14 1/2" below the floor frame
- Receives Superior Chutes UL-labeled bottom- or side-hinged intake doors

47 1/2"	**15 5/8"**	**18 1/4"**	**20 1/2"**
SECTION HEIGHT	THROAT WIDTH	THROAT HEIGHT	CHUTE CL TO FINISHED WALL

COMPANY
Superior Chutes and Compactors Installations, Inc.
Mfg: Chutes Enterprises

OFFICE
774 Manor Rd, Suite 207
Staten Island, NY 10314

SHOP
30 N 15th Street
East Orange, NJ 07017

PHONE & EMAIL
Office 718-494-2247
Cell 917-701-3268 · Fax 718-494-2257
chutesenterprises@gmail.com

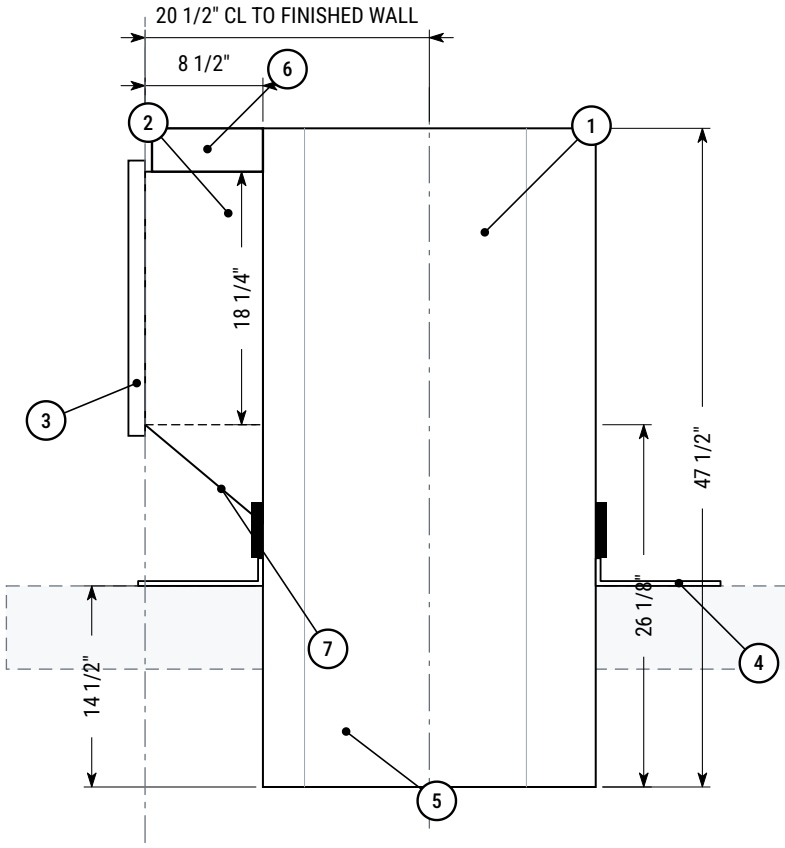

SIDE ELEVATION

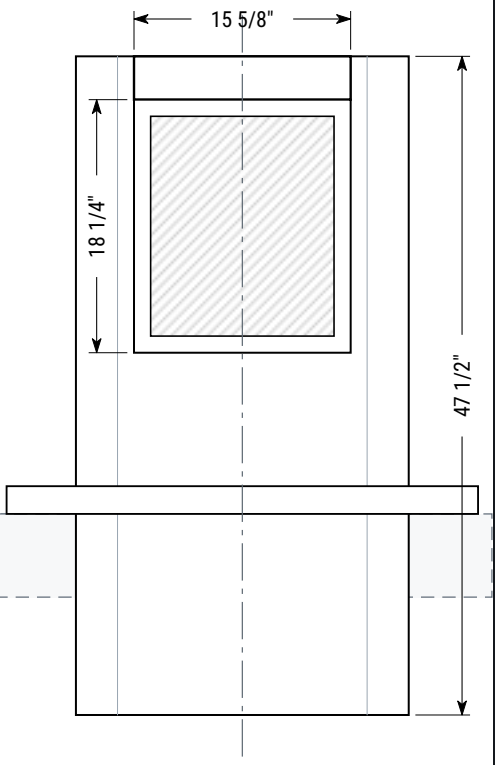

FRONT ELEVATION

Viewed at intake throat

1. Chute section
2. Intake throat
3. Door frame flange (intake door shipped separately)
4. Floor frame — steel angle
5. Section bottom (slip joint into section below)
6. Throat head box
7. Sloped throat bottom plate

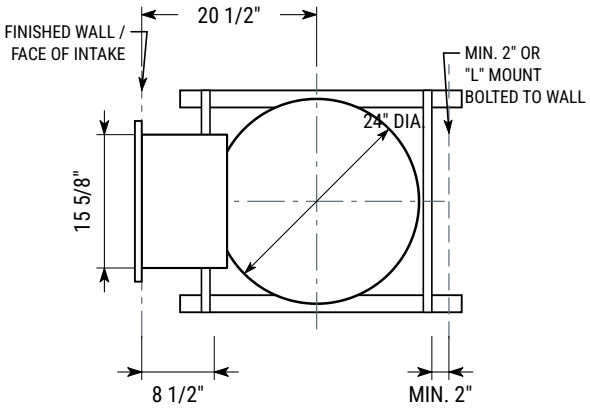

PLAN AT FLOOR FRAME

NOTES

1. All dimensions in inches. Do not scale drawing.
2. Chute diameter per project; 24" diameter is the standard of the industry.
3. Face of intake is set to the finished wall: 20 1/2" from chute centerline, 8 1/2" from chute face.
4. Intake door shipped separately and installed after the chute is enclosed.
5. Floor slab shown phantom. Undimensioned features are proportional only.
6. Back of chute: min. 2" clearance or "L" mount bolted to wall.

FURNISHED & INSTALLED BY	DRAWING TITLE	MODEL	SCALE	SHEET
SUPERIOR CHUTES & Compactors Installations, Inc. **Mfg: Chutes Enterprises** Office: 774 Manor Rd, Staten Island, NY Shop: 30 N 15th St, East Orange, NJ	**Intake Section Elevations** Chute section with intake throat and floor frame	**Intake Section** UNITS **Inches**	**NTS** DRAWN BY **SC&CI**	**D-1 of 1** STATUS **For Reference**

Specifications

DIMENSIONS

Section height	**47 1/2"**
Throat width	**15 5/8"**
Throat height	**18 1/4"**
Chute face to finished wall	**8 1/2"**
Chute CL to finished wall	**20 1/2"**
Back clearance	**Min. 2" or "L" mount bolted to wall**
Section bottom to throat	**26 1/8"**
Section bottom to floor frame	**14 1/2"**

CONSTRUCTION

Chute	**24" diameter standard; 18/16 U.S. gauge aluminized steel or type 304 stainless steel**
Seams	**Vertical seams lapped and welded; horizontal seams slip-jointed**
Floor frame	**2" x 2" x 1/8" steel angle at all floors**
Intake door	**1 1/2 hour UL Label "B", as scheduled**

INSTALLATION COORDINATION

- Coordinate the throat location and door size with the chute shaft wall opening.
- Intake doors are installed after the chute is enclosed with walls, preventing damage to the stainless steel pre-polished finish.
- Firestopping, fire safing and smoke seals by others.

COMPATIBLE EQUIPMENT

- Superior Chutes 24" gravity trash and linen chutes
- Superior Chutes UL-labeled intake doors, custom-sized

GUIDE SPECIFICATION — SHORT FORM

Suggested wording for project specifications (MasterFormat Section 14 91 00 — Facility Chutes). Edit to suit project.

Manufacturer: Manufactured by Chutes Enterprises, East Orange, NJ; furnished and installed by Superior Chutes and Compactors Installations, Inc.

Intake sections: Factory-fabricated chute section, 47 1/2" high, with integral intake throat 15 5/8" wide x 18 1/4" high; intake face 8 1/2" from chute face (20 1/2" from chute centerline to finished wall); throat bottom 26 1/8" above section bottom; section extends 14 1/2" below the floor frame.

Floor frames: 2" x 2" x 1/8" steel angle support shaft frame at all floors.

Doors: 1 1/2 hour UL Label "B" intake doors, custom-sized to each building; hinge type as scheduled.

INTAKE SECTION — KEY DIMENSIONS

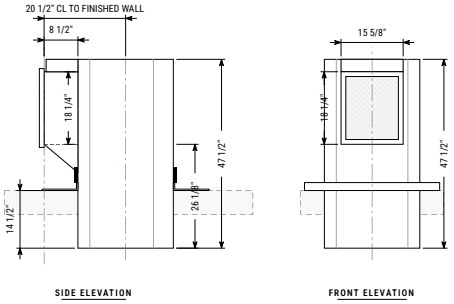

COMPANY
Superior Chutes and Compactors Installations, Inc.
Mfg: Chutes Enterprises

OFFICE
774 Manor Rd, Suite 207
Staten Island, NY 10314

SHOP
30 N 15th Street
East Orange, NJ 07017

PHONE & EMAIL
Office 718-494-2247
Cell 917-701-3268 · Fax 718-494-2257
chutesenterprises@gmail.com

As part of ongoing product improvements, we reserve the right to change specifications at any time without notice.