SUPERIOR CHUTES
& COMPACTORS INSTALLATIONS, INC.
MFG: CHUTES ENTERPRISES

PRODUCT SPECIFICATION
SC-SPEC-CECP

APARTMENT COMPACTOR

CE-CP Container Packer

Compacts refuse directly into a 2-yard container

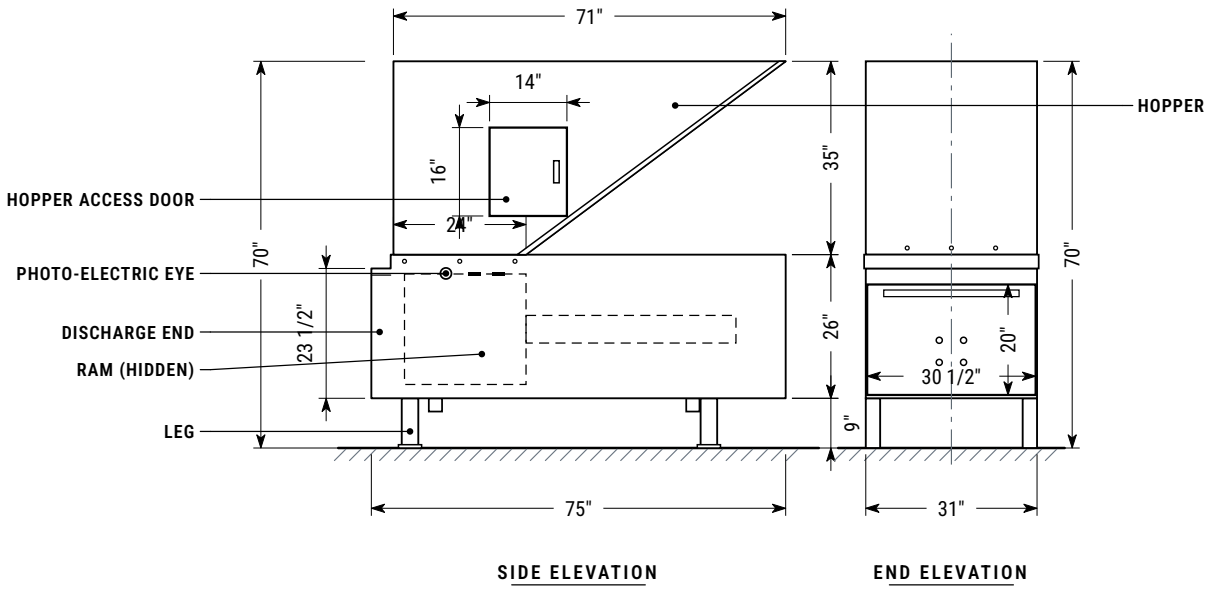

General arrangement — all dimensions in inches. See drawing sheets for complete dimensions.

OVERVIEW

The CE-CP Container Packer is an apartment compactor that compacts refuse directly into a 2-yard container (front-load or rear-load). It delivers 34.4 cubic yards per hour of displacement with a 32.4-second cycle, an 11 GPM two-stage hydraulic pump and a Lovato programmable controller with full/fault monitoring and an internal HMI.

KEY FEATURES

- Lovato programmable controller with full/fault monitors and internal HMI
- PepperI+Fuchs RLK61 photo-electric eye and Lovato door safety switch
- Electrical components UL, IEC/EC and CSA compliant
- Double-layer 1/4" bottom plate with AR400
- 3 HP motor standard, 5 HP optional; 208/230/460 V, 3-phase
- Remote power unit: 44" x 18" x 16"

34.4 yd^3/hr	**32.4** sec	**0.31** yd^3	**47** psi
DISPLACEMENT PER HOUR	CYCLE TIME	RATING	RAM FACE PRESSURE (M)

COMPANY
Superior Chutes and Compactors Installations, Inc.
Mfg: Chutes Enterprises

OFFICE
774 Manor Rd, Suite 207
Staten Island, NY 10314

SHOP
30 N 15th Street
East Orange, NJ 07017

PHONE & EMAIL
Office 718-494-2247
Cell 917-701-3268 · Fax 718-494-2257
chutesenterprises@gmail.com

Technical Specifications

SPECIFICATIONS

Rating	0.31 cu. yds
Charging area	24" L x 30.5"
Top opening	31" W x 71" L
Overall dimensions	31" W x 75" L x 70" H
Ram dimension	30.5" x 20"
Weight	1,600 lbs

PERFORMANCE

Cycle time	32.4 seconds
Displacement per hour	34.4 cu. yds
Ram penetration	8"
Ram face pressure (N) @ 1,200 psi	19 psi
Ram face pressure (M) @ 3,000 psi	47 psi

STRUCTURAL

Body sides	1/4" plate
Bottom plate	Double layer 1/4" plate with AR400
Hopper	11 gauge
Hopper striker plate	1/4" plate
Ram face	1/2" plate

ELECTRICAL

Power unit	44" x 18" x 16"
Motor	3 HP (5 HP optional)
Motor power	208/230/460 V, 3-phase, 20 A
Control voltage	120 V
Controller	Lovato programmable controller
Monitors	Full/fault and internal HMI
Photo-electric eye	Pepperl+Fuchs RLK61
Door safety switch	Lovato
Compliance	Electrical components are UL, IEC/EC and CSA compliant

HYDRAULICS

Cylinder	3.5" bore, 1.5" rod
Pump	2-stage 11 GPM gear pump
Oil tank	12 gallons
Operating pressure	500 – 1,500 psi
Relief pressure	1,500 psi
Rated pressure	3,000 psi

REMOTE POWER UNIT

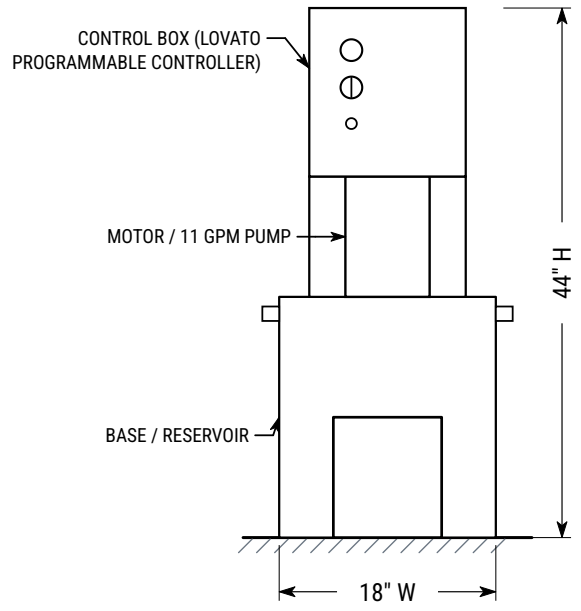

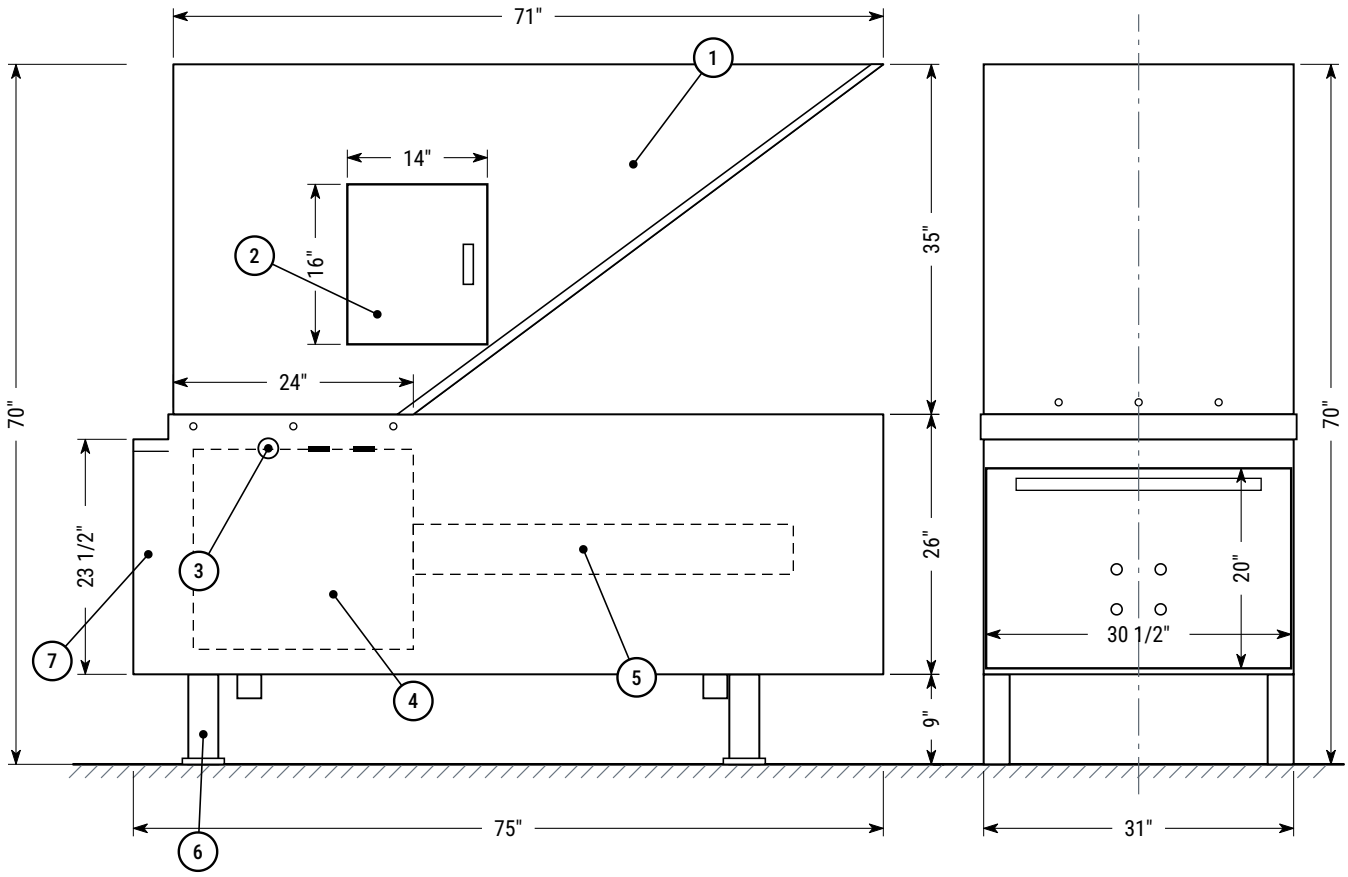

SIDE ELEVATION

END ELEVATION

Viewed at discharge end

1. Hopper — 31" W x 71" L top opening
2. Hopper access door 14" x 16"
3. Photo-electric eye location
4. Ram (hidden) — 1/2" plate face
5. Hydraulic cylinder (hidden)
6. Leg
7. Discharge end — container connection

NOTES

1. All dimensions in inches. Do not scale drawing.
2. Overall dimensions 31" W x 75" L x 70" H. Weight 1,600 lbs.
3. Charging area 24" L x 30.5". Ram dimension 30.5" x 20". Ram penetration 8".
4. Remote power unit 44" H x 18" W x 16" D (see sheet D-2).
5. Undimensioned features are shown for identification and are proportional only.

FURNISHED & INSTALLED BY	DRAWING TITLE	MODEL	SCALE	SHEET
SUPERIOR CHUTES & Compactors Installations, Inc. **Mfg: Chutes Enterprises** Office: 774 Manor Rd, Staten Island, NY Shop: 30 N 15th St, East Orange, NJ	**Side & End Elevations** Container packer — general arrangement	**CE-CP** UNITS **Inches**	**NTS** DRAWN BY **SC&CI**	**D-1 of 2** STATUS **For Reference**

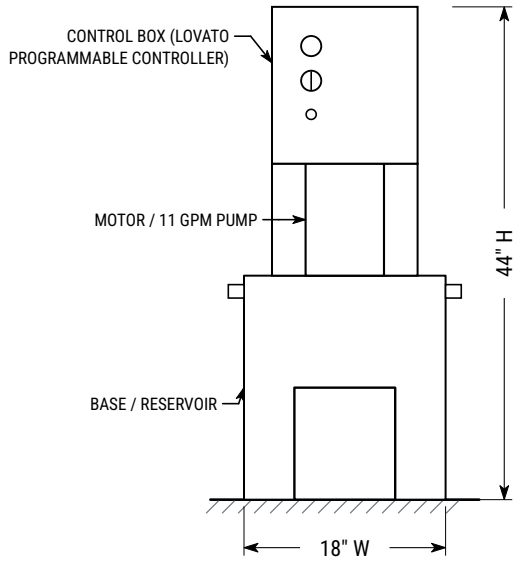

REMOTE POWER UNIT

Front elevation

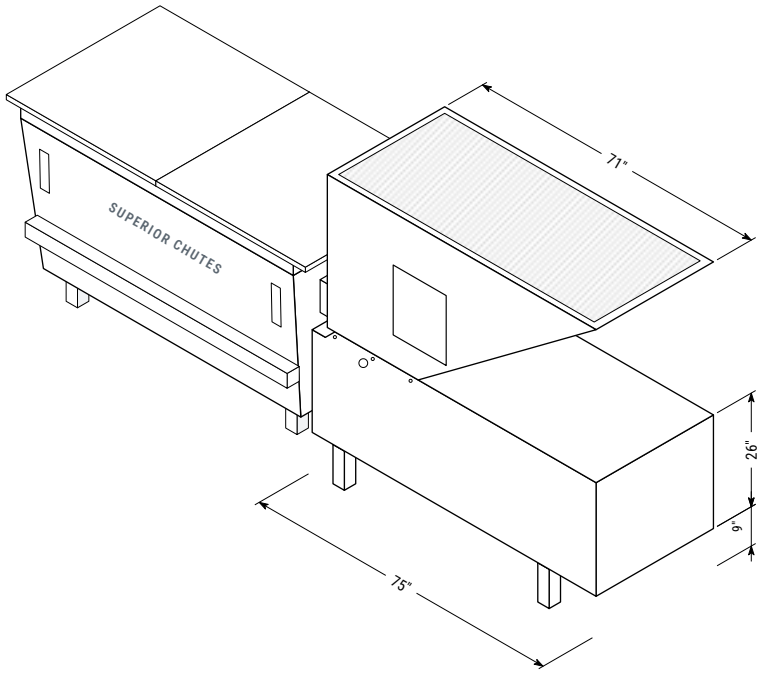

ISOMETRIC — WITH 2-YARD CONTAINER

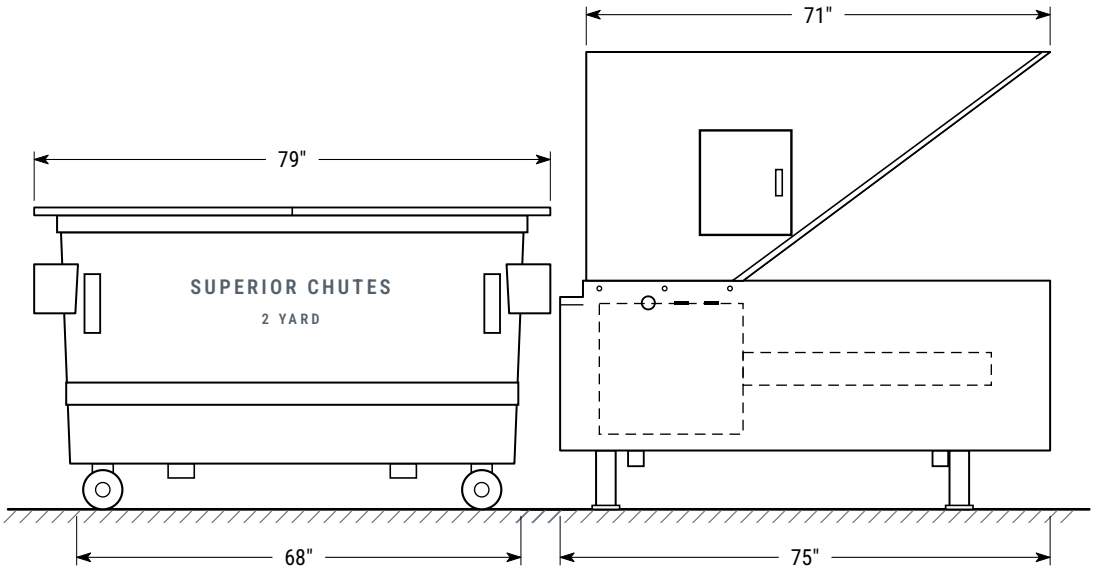

ASSEMBLY ELEVATION — CE-CP WITH 2-YARD CONTAINER

FURNISHED & INSTALLED BY	DRAWING TITLE	MODEL	SCALE	SHEET
SUPERIOR CHUTES & Compactors Installations, Inc. **Mfg: Chutes Enterprises** Office: 774 Manor Rd, Staten Island, NY Shop: 30 N 15th St, East Orange, NJ	**Power Unit & Assembly** Remote power unit; packer with 2-yard container	**CE-CP** UNITS **Inches**	**NTS** DRAWN BY **SC&CI**	**D-2 of 2** STATUS **For Reference**

INSTALLATION COORDINATION

- Electrical: 208/230/460 V, 3-phase, 20 A to the remote power unit; 120 V control voltage.
- Locate the remote power unit (44" x 18" x 16") to suit field conditions.
- Provide clear floor area at the discharge end for the container and its removal.
- Hopper top opening 31" W x 71" L — coordinate the feed / chute connection.

COMPATIBLE EQUIPMENT

- Superior Chutes 2-yard container (front-load or rear-load)
- Superior Chutes gravity trash chutes and intake doors

GUIDE SPECIFICATION — SHORT FORM

Suggested wording for project specifications (MasterFormat Section 11 82 00 — Facility Solid Waste Handling Equipment). Edit to suit project.

Manufacturer: Manufactured by Chutes Enterprises, East Orange, NJ; furnished and installed by Superior Chutes and Compactors Installations, Inc. Basis of design: CE-CP Container Packer.

Type: Apartment compactor / container packer compacting directly into a 2-yard container (front-load or rear-load).

Performance: Rating 0.31 cu. yds; cycle time 32.4 seconds; displacement 34.4 cu. yds per hour; ram penetration 8"; ram face pressure 19 psi (N) at 1,200 psi and 47 psi (M) at 3,000 psi.

Size: Overall 31" W x 75" L x 70" H; top opening 31" W x 71" L; charging area 24" L x 30.5"; ram 30.5" x 20"; weight 1,600 lbs.

Construction: 1/4" plate body sides; double-layer 1/4" bottom plate with AR400; 11 gauge hopper; 1/4" hopper striker plate; 1/2" plate ram face.

Electrical: 3 HP motor (5 HP optional), 208/230/460 V, 3-phase, 20 A; 120 V controls; Lovato programmable controller with full/fault monitors and internal HMI; Pepperl+Fuchs RLK61 photo-electric eye; Lovato door safety switch; UL, IEC/EC and CSA compliant components.

Hydraulics: 3.5" bore x 1.5" rod cylinder; 2-stage 11 GPM gear pump; 12 gallon oil tank; operating pressure 500–1,500 psi; relief 1,500 psi; rated 3,000 psi.

GENERAL ARRANGEMENT — OVERALL DIMENSIONS

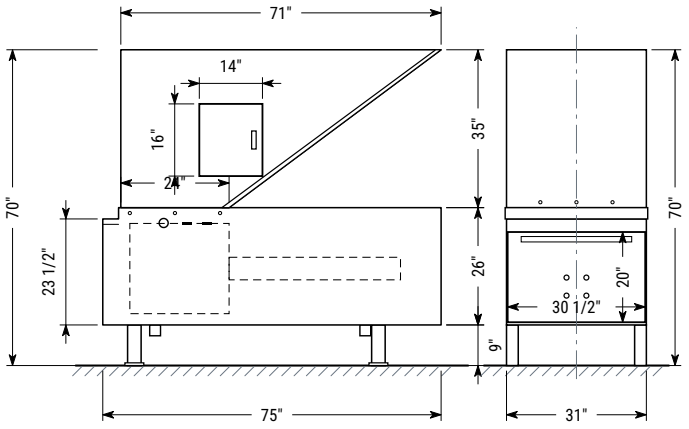

COMPANY
Superior Chutes and Compactors Installations, Inc.
Mfg: Chutes Enterprises

OFFICE
774 Manor Rd, Suite 207
Staten Island, NY 10314

SHOP
30 N 15th Street
East Orange, NJ 07017

PHONE & EMAIL
Office 718-494-2247
Cell 917-701-3268 · Fax 718-494-2257
chutesenterprises@gmail.com

As part of ongoing product improvements, we reserve the right to change specifications at any time without notice.