CHUTE-FED TRASH COMPACTOR

CE-550 Compactor

Heavy-duty automatic bagger compactor for buildings up to approximately 500 apartments

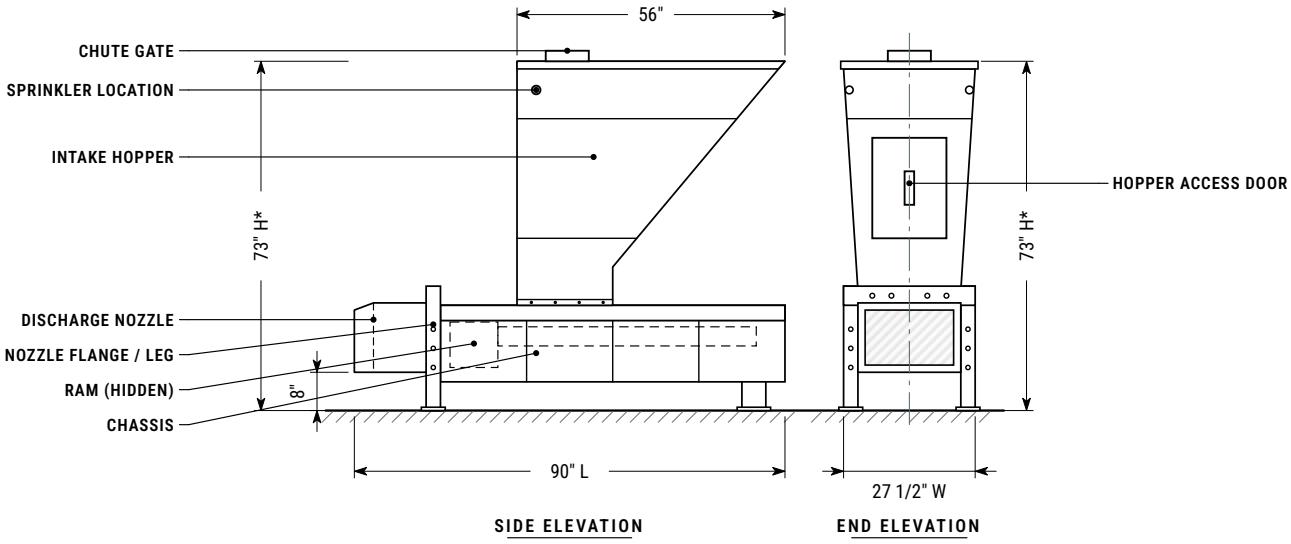

CE-550 general arrangement — all dimensions in inches. See drawing sheets for complete dimensions.

OVERVIEW

The CE-550 is a chute-fed, fully automatic trash compactor designed for buildings of up to approximately 500 apartments. Refuse is compacted and packed into single trash bags or into a continuous plastic tube (bagging) system that packs up to ten bags without attention. The unit can also be fitted with reusable one- to two-yard containers, front- or rear-load.

KEY FEATURES

- PLC controller with built-in HMI status display and many programmed features
- Automatic and manual controls with visual-audible alarm
- Hopper can be mounted in four different directions; nozzle supplied in different configurations
- 58,905 lbs of ram force from a 5" bore cylinder at 3,000 psi
- Brinell 400 hardened steel wear plate on the main body floor (1/2" total floor thickness)

15 yd^3/hr	30 sec	0.1286 yd^3	58,905 lbs
HOURLY CAPACITY	CYCLE TIME	VOLUME PER CYCLE	RAM FORCE

COMPANY
Superior Chutes and Compactors Installations, Inc.
Mfg: Chutes Enterprises

OFFICE
774 Manor Rd, Suite 207
Staten Island, NY 10314

SHOP
30 N 15th Street
East Orange, NJ 07017

PHONE & EMAIL
Office 718-494-2247
Cell 917-701-3268 · Fax 718-494-2257
chutesenterprises@gmail.com

Technical Specifications

GENERAL

Model	CE-550 chute-fed trash compactor
Recommended duty	Up to approximately 500 apartments
Capacity	15 cubic yards per hour
Volume per cycle	0.1286 cubic yards
Cycle time	30 seconds
Ram force	58,905 lbs
Operation	Fully automatic, activated by photo-electric cell; starts/stops unattended; can be switched to manual operation
Ram travel	From fully retracted position to beyond the upper shear blade
Protection	Motor overload and continuous run-time protection timing relay
Construction	Factory structurally welded and assembled in three sections: (1) chassis holding the ram and cylinder; (2) hopper — can be mounted in four different directions; (3) nozzle — can be supplied in different configurations
Testing	Fully assembled and tested prior to shipment

DIMENSIONS

Overall	73" H* x 27 1/2" W x 90" L
Hopper top	25 1/2" x 56"
Discharge nozzle	8" above floor (to underside)

MECHANICAL

Compactor body	1/4" plate chassis reinforced with side rails; 1/2" steel front and back wall frame; all components continuously welded
Floor	1/4" Brinell 400 hardened, abrasion-resistant wear plate over 1/4" bottom — 1/2" total
Hopper	1/4" or 3/8" impact plate; 1/4" front body of hopper; 11 gauge hopper sides
Shear	2" x 4" steel bridge with hardened steel blade
Ram	1" plate, full face, reinforced
Shut-off safety gate	1/4" plate

ELECTRICAL

Motor	Energy-efficient TEFC 5 HP, 3450 RPM, 60 Hz, 208/230 V, 3-phase, 5-wire
Motor efficiency	NEMA nominal efficiency 89.5 (Std.)
Control & PLC logic circuits	Protected with 5 A fuse at 115 V and OFF–ON switch
Controls	Automatic and manual controls with visual-audible alarm
PLC controller	Built-in HMI status display; many programmed features
Wiring	1/2" UL type flexible metal conduit, plastic-coated liquid-tight

HYDRAULIC

Pump	High-efficiency two-stage gear pump, 11 GPM, with 74-micron suction strainer
Cylinder	5" diameter bore, 28" stroke; 3,000 psi working pressure
Hoses	1/2" SAE 100 R-8, rated 3,000 psi working pressure, flame resistant
Directional control valve	115 V, 60 Hz two-way, NEMA 13, connected to manifold block fitted with automatic pressure relief valve
Safety factor	All components rated 1:4 load safety factor for burst pressure
Hydraulic tank	13 gallons; breather cap / oil fill and check, drain plug

SAFETY FEATURES

01	Sprinkler head (location on either side of hopper)
02	Access hopper door shut-off switch
03	Sliding service door
04	Full-bag shut-off switch
05	Emergency stop switch

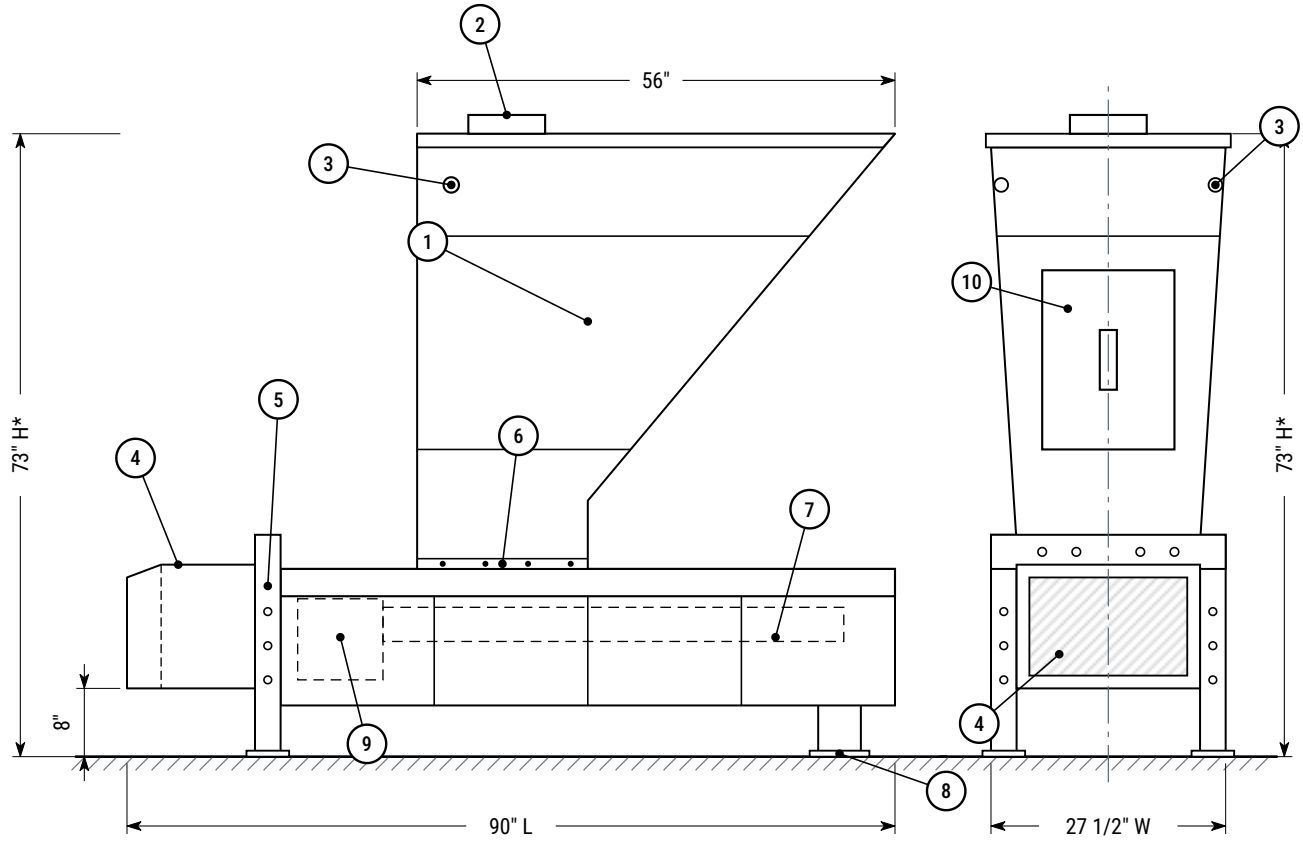

SIDE ELEVATION

END ELEVATION

Viewed at discharge nozzle

1. Intake hopper
2. Chute gate — building chute connection
3. Sprinkler location (either side)
4. Discharge nozzle — bolted on
5. Nozzle flange / front leg frame
6. Hopper bolted onto body
7. Chassis — holds ram and cylinder
8. Anchor holes on each leg
9. Ram (hidden)
10. Hopper access door with shut-off switch

NOTES

1. All dimensions in inches. Do not scale drawing.
2. * Compactor height may be adjusted to accommodate field conditions or the mounting of a recycling diverter by adjusting hopper height.
3. Hopper top 25 1/2" x 56". Hopper can be mounted in four different directions.
4. Discharge nozzle is bolted on and can be supplied in different configurations.
5. Undimensioned features are shown for identification and are proportional only.

FURNISHED & INSTALLED BY	DRAWING TITLE	MODEL	SCALE	SHEET
SUPERIOR CHUTES & Compactors Installations, Inc. **Mfg: Chutes Enterprises** Office: 774 Manor Rd, Staten Island, NY Shop: 30 N 15th St, East Orange, NJ	**Side & End Elevations** Chute-fed trash compactor — general arrangement	**CE-550** UNITS **Inches**	**NTS** DRAWN BY **SC&CI**	**D-1 of 2** STATUS **For Reference**

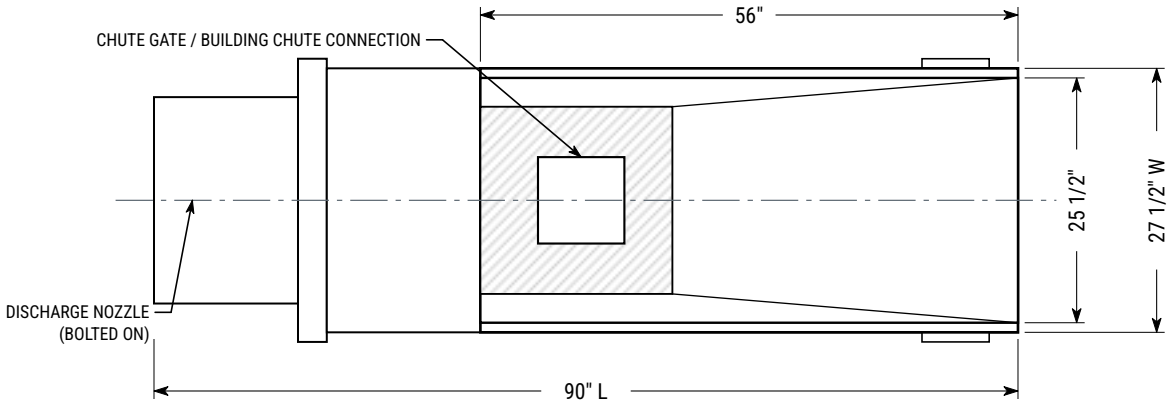

PLAN VIEW

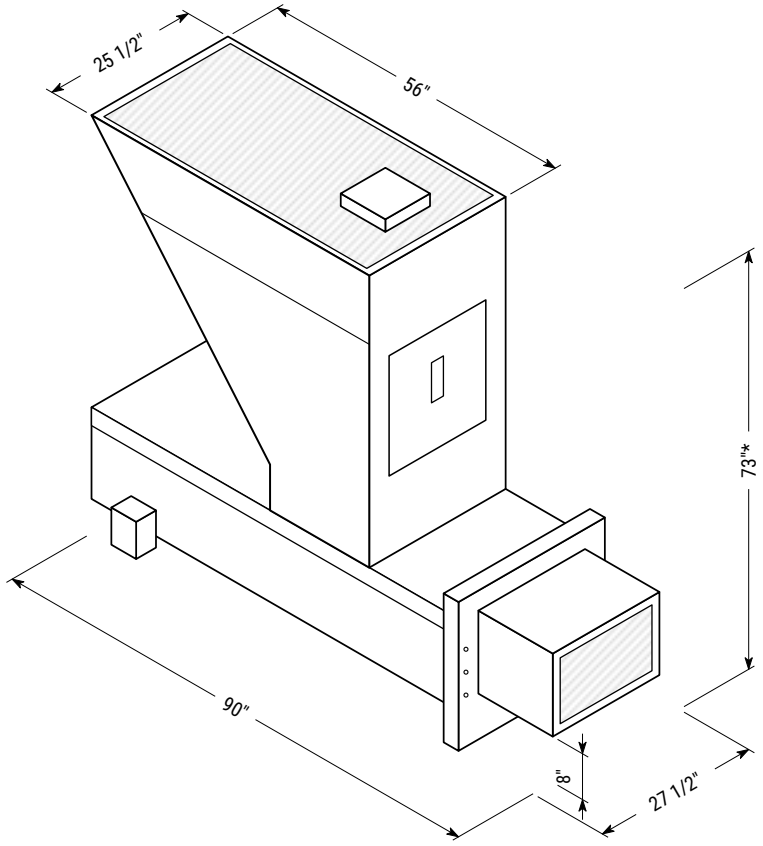

ISOMETRIC VIEW

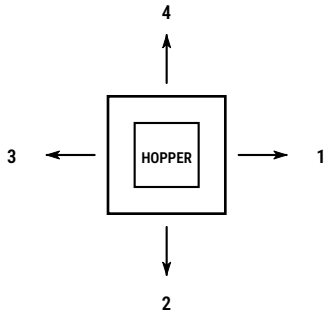

HOPPER MOUNTING

Hopper can be mounted in four directions

FURNISHED & INSTALLED BY	DRAWING TITLE	MODEL	SCALE	SHEET
SUPERIOR CHUTES & Compactors Installations, Inc. **Mfg: Chutes Enterprises** Office: 774 Manor Rd, Staten Island, NY Shop: 30 N 15th St, East Orange, NJ	**Plan View & Details** Plan view, isometric view and hopper mounting	**CE-550** UNITS **Inches**	**NTS** DRAWN BY **SC&CI**	**D-2 of 2** STATUS **For Reference**

Compactor Dimensions

MODEL	HEIGHT (H)*	WIDTH (W)	LENGTH (L)
CE-250	71"	26"	80"
CE-550	**73"**	**27 1/2"**	**90"**

* Compactor height may be adjusted to accommodate field conditions or the mounting of a recycling diverter (Bi-Sorter / Tri-Sorter) by adjusting the hopper height.

INSTALLATION COORDINATION

- Building chute terminates at the hopper chute gate.
- Electrical: 208/230 V, 3-phase power to the hydraulic power unit.
- Sprinkler head location is provided on either side of the hopper; coordinate with the building fire-protection system.
- Anchor the compactor through the anchor holes provided on each leg.
- Select hopper direction (four options) and nozzle configuration to suit the compactor room layout.

COMPATIBLE EQUIPMENT

- Bi-Sorter and Tri-Sorter recycling diverter systems (hopper height adjusted to suit)
- Reusable 1 to 2 yard front- or rear-load containers
- Superior Chutes gravity trash chutes and intake doors

> **Sizing guide.** The CE-550 handles buildings of up to approximately 500 apartments. For buildings of up to approximately 250 apartments, the CE-250 is also available.

GUIDE SPECIFICATION — SHORT FORM

Suggested wording for project specifications (MasterFormat Section 11 82 00 — Facility Solid Waste Handling Equipment). Edit to suit project.

Manufacturer: Manufactured by Chutes Enterprises, East Orange, NJ; furnished and installed by Superior Chutes and Compactors Installations, Inc. Basis of design: Model CE-550.

Type: Chute-fed, fully automatic trash compactor; recommended for buildings of up to approximately 500 apartments.

Performance: Capacity 15 cubic yards per hour; 0.1286 cubic yards per cycle; 30 seconds per cycle; 58,905 lbs of ram force.

Size: Overall 73" H x 27 1/2" W x 90" L; hopper top 25 1/2" x 56".

Construction: 1/4" plate chassis reinforced with side rails, 1/2" steel front and back wall frame, continuously welded; 1/2" floor (1/4" Brinell 400 wear plate over 1/4" bottom); 1" full-face reinforced ram; 2" x 4" shear bridge with hardened steel blade. Hopper mountable in four directions; bolted-on discharge nozzle.

Electrical: TEFC 5 HP, 3450 RPM, 208/230 V, 3-phase, 60 Hz motor; 115 V PLC controls with 5 A fuse, built-in HMI status display, automatic/manual controls and visual-audible alarm.

Hydraulics: 11 GPM two-stage gear pump; 5" bore x 28" stroke cylinder at 3,000 psi; 13 gallon tank; components rated 1:4 load safety factor for burst pressure.

Safety: Sprinkler head, access hopper door shut-off switch, sliding service door, full-bag shut-off switch, emergency stop switch; motor overload and run-time protection relay.

Discharge: Single bags, continuous tube bagging (up to 10 bags unattended), or 1 to 2 yard front- or rear-load containers, as scheduled.

COMPANY
Superior Chutes and Compactors Installations, Inc.
Mfg: Chutes Enterprises

OFFICE
774 Manor Rd, Suite 207
Staten Island, NY 10314

SHOP
30 N 15th Street
East Orange, NJ 07017

PHONE & EMAIL
Office 718-494-2247
Cell 917-701-3268 · Fax 718-494-2257
chutesenterprises@gmail.com

As part of ongoing product improvements, we reserve the right to change specifications at any time without notice.