SUPERIOR CHUTES
& COMPACTORS INSTALLATIONS, INC.
MFG: CHUTES ENTERPRISES

PRODUCT SPECIFICATION
SC-SPEC-CE250

CHUTE-FED TRASH COMPACTOR

CE-250 Compactor

Fully automatic bagger compactor for buildings of up to approximately 250 apartments

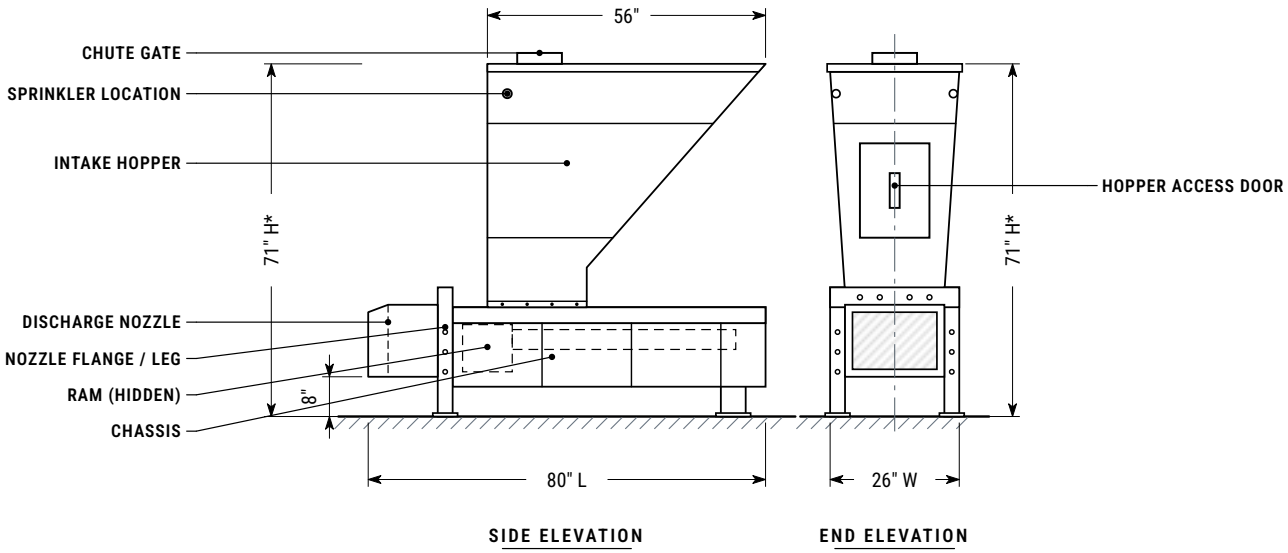

CE-250 general arrangement — all dimensions in inches. See drawing sheets for complete dimensions.

OVERVIEW

The CE-250 is a chute-fed, fully automatic trash compactor designed for buildings of up to approximately 250 apartments. Refuse is compacted and packed into single trash bags or into a continuous plastic tube (bagging) system that packs up to ten bags without attention. The unit can also be fitted with reusable one- to two-yard containers, front- or rear-load.

KEY FEATURES

- Photo-electric eye activation — starts and stops unattended; switchable to manual operation
- Ram travels from fully retracted position beyond the upper shear blade every cycle
- AR-400 hardened steel wear plate on the main body floor (1/2" total floor thickness)
- Motor overload and continuous run-time protection timing relay (12-minute limit)
- Factory welded, assembled in three sections, fully assembled and tested before shipment

11 yd³/hr	27 sec	4:1	38,000 lbs
HOURLY CAPACITY	CYCLE TIME	COMPACTION RATIO	RAM FORCE AT 3,000 PSI

COMPANY
Superior Chutes and Compactors Installations, Inc.
Mfg: Chutes Enterprises

OFFICE
774 Manor Rd, Suite 207
Staten Island, NY 10314

SHOP
30 N 15th Street
East Orange, NJ 07017

PHONE & EMAIL
Office 718-494-2247
Cell 917-701-3268 · Fax 718-494-2257
chutesenterprises@gmail.com

Technical Specifications

GENERAL

Model	CE-250 chute-fed trash compactor
Recommended duty	Up to approximately 250 apartments
Capacity	11 cubic yards per hour
Cycle time	27 seconds
Compaction ratio	4:1
Operation	Fully automatic, activated by photo-electric eye; starts/stops unattended; can be switched to manual operation
Ram travel	From fully retracted position to beyond the upper shear blade
Protection	Motor overload and continuous run-time protection timing relay, 12-minute limit
Construction	Factory structurally welded and assembled in three sections: chassis/body, hopper and nozzle
Testing	Fully assembled and tested prior to shipment

DIMENSIONS

Overall	71" H* x 26" W x 80" L
Hopper top opening	24" x 56"
Chamber opening	18" x 20"
Ram face	19" W x 10 3/4" H
Remote power unit	16" D x 19" W x 45" H
Bag tray	60"

MECHANICAL

Compactor body	1/4" plate chassis reinforced with side rails; 1/2" steel front and back wall frame; all components continuously welded
Floor	1/4" AR-400 hardened, abrasion-resistant wear plate over 1/4" bottom — 1/2" total
Hopper	1/4" impact plate; 1/4" front body of hopper / front access door; 11 gauge hopper sides
Shear	2" x 4" steel bridge with AR-400 hardened steel blade
Ram	3/4" plate, full face, reinforced
Shut-off safety gate	1/4" plate

ELECTRICAL

Motor	Energy-efficient 3 HP, 1750 RPM, 60 Hz, 208/230 V, 3-phase, 5-wire
Motor efficiency	NEMA nominal efficiency 82.5 (Std.)
Control & logic circuits	115 V with OFF–ON switch and 5 A fuse
Enclosure	NEMA Type 1 (NEMA 12 optional)
Wiring	1/2" UL-rated liquid-tight conduit; meets J.I.C. standards
Option	Single-phase motor available

HYDRAULIC

Pump	High-efficiency two-stage gear pump, 5.5 GPM, with 74-micron suction strainer
Cylinder	4" bore, 2" rod, 24" stroke; 2,500 psi working pressure
Ram force	38,000 lbs at 3,000 psi — 186 lbs of force per square inch of ram face
Hoses	1/2" SAE 100 R-8, rated 3,000 psi working pressure, flame resistant
Directional control valve	115 V, 60 Hz two-way, NEMA 13, connected to manifold block fitted with automatic pressure relief valve
Safety factor	All components rated 1:4 load safety factor for burst pressure
Oil tank	12.5 gallons; breather cap / oil fill and check, drain plug

SAFETY FEATURES

01	Sprinkler head (location on either side of hopper)
02	Access hopper door shut-off switch
03	Sliding service door
04	Full-bag shut-off switch
05	Emergency stop switch

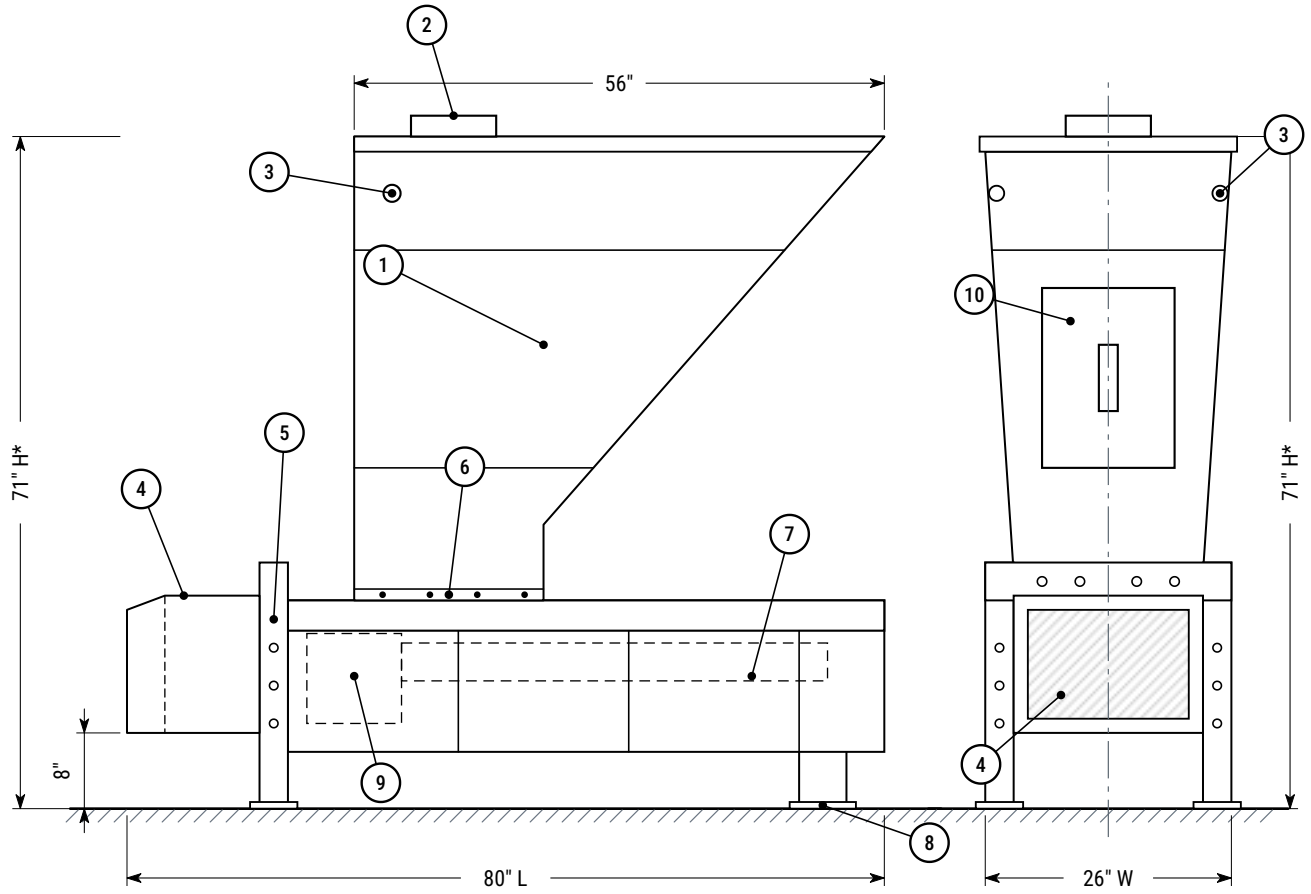

SIDE ELEVATION

END ELEVATION

Viewed at discharge nozzle

1. Intake hopper
2. Chute gate — building chute connection
3. Sprinkler location (either side)
4. Discharge nozzle
5. Nozzle flange / front leg frame
6. Hopper-to-body joint
7. Chassis / body — 1/4" plate with side rails
8. Leg / floor anchorage
9. Ram (hidden)
10. Hopper access door with shut-off switch

NOTES

1. All dimensions in inches. Do not scale drawing.
2. * Compactor height may be adjusted to accommodate field conditions or the mounting of a recycling diverter by adjusting hopper height.
3. Hopper top opening 24" x 56". Chamber opening 18" x 20".
4. Remote-mounted hydraulic power unit: 16" D x 19" W x 45" H (see sheet D-2).
5. Undimensioned features are shown for identification and are proportional only.

FURNISHED & INSTALLED BY	DRAWING TITLE	MODEL	SCALE	SHEET
SUPERIOR CHUTES & Compactors Installations, Inc. **Mfg: Chutes Enterprises** Office: 774 Manor Rd, Staten Island, NY Shop: 30 N 15th St, East Orange, NJ	**Side & End Elevations** Chute-fed trash compactor — general arrangement	**CE-250** UNITS **Inches**	**NTS** DRAWN BY **SC&CI**	**D-1 of 2** STATUS **For Reference**

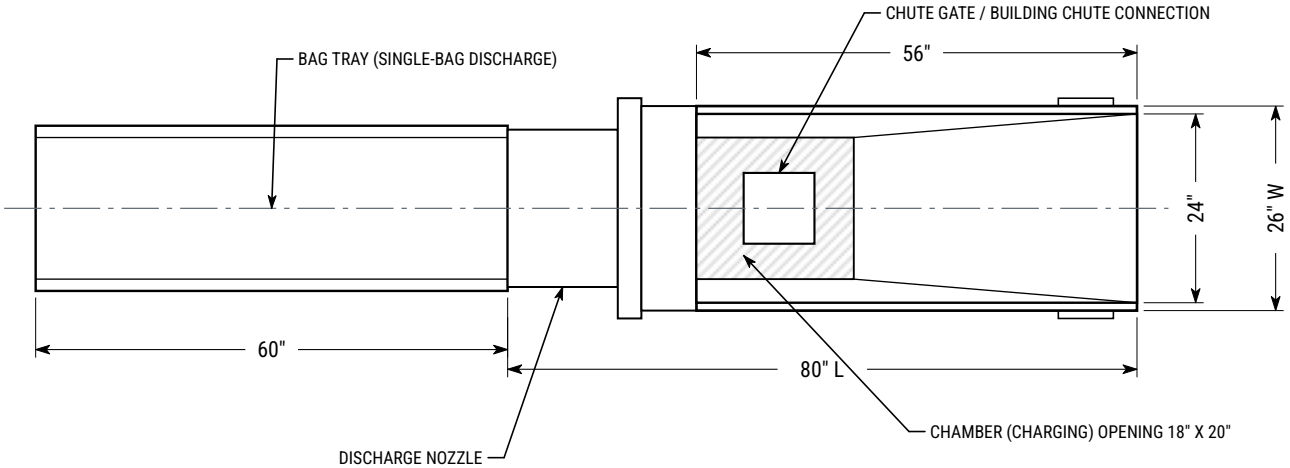

PLAN VIEW

REMOTE HYDRAULIC POWER UNIT

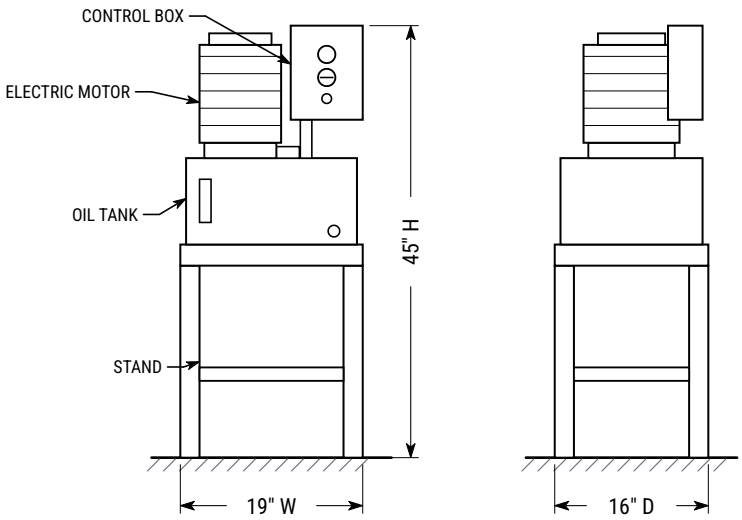

FRONT **SIDE**

RAM FACE DETAIL

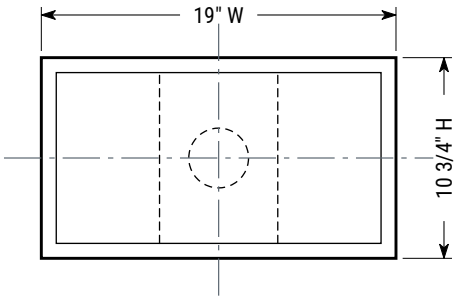

3/4" plate, full face, reinforced
38,000 lbs ram force at 3,000 psi
186 lbs per sq. in. of ram face

FURNISHED & INSTALLED BY	DRAWING TITLE	MODEL	SCALE	SHEET
SUPERIOR CHUTES & Compactors Installations, Inc. **Mfg: Chutes Enterprises** Office: 774 Manor Rd, Staten Island, NY Shop: 30 N 15th St, East Orange, NJ	**Plan View & Details** Plan view, remote power unit and ram face	**CE-250** UNITS **Inches**	**NTS** DRAWN BY **SC&CI**	**D-2 of 2** STATUS **For Reference**

Compactor Dimensions

MODEL	HEIGHT (H)*	WIDTH (W)	LENGTH (L)
CE-250	**71"**	**26"**	**80"**
CE-550	73"	27 1/2"	90"

* Compactor height may be adjusted to accommodate field conditions or the mounting of a recycling diverter (Bi-Sorter / Tri-Sorter) by adjusting the hopper height.

INSTALLATION COORDINATION

- Building chute terminates at the hopper chute gate.
- Electrical: 208/230 V, 3-phase power to the remote power unit (single-phase motor optional).
- Sprinkler head location is provided on either side of the hopper; coordinate with the building fire-protection system.
- Allow room at the discharge nozzle for the 60" bag tray or the selected container.
- Locate the remote power unit (16" D x 19" W x 45" H) to suit field conditions.

COMPATIBLE EQUIPMENT

- Bi-Sorter and Tri-Sorter recycling diverter systems (hopper height adjusted to suit)
- Reusable 1 to 2 yard front- or rear-load containers
- Superior Chutes gravity trash chutes and intake doors

> **Sizing guide.** The CE-250 handles buildings of up to approximately 250 apartments. For buildings of up to approximately 500 apartments, see the CE-550.

GUIDE SPECIFICATION — SHORT FORM

Suggested wording for project specifications (MasterFormat Section 11 82 00 — Facility Solid Waste Handling Equipment). Edit to suit project.

Manufacturer: Manufactured by Chutes Enterprises, East Orange, NJ; furnished and installed by Superior Chutes and Compactors Installations, Inc. Basis of design: Model CE-250.

Type: Chute-fed, fully automatic trash compactor; recommended for buildings of up to approximately 250 apartments.

Performance: Capacity 11 cubic yards per hour; cycle time 27 seconds; compaction ratio 4:1; ram force 38,000 lbs at 3,000 psi (186 lbs per square inch of ram face).

Size: Overall 71" H x 26" W x 80" L; hopper top opening 24" x 56"; chamber opening 18" x 20"; ram face 19" W x 10 3/4" H. Remote power unit 16" D x 19" W x 45" H.

Construction: 1/4" plate chassis reinforced with side rails, 1/2" steel front and back wall frame, continuously welded; 1/2" floor (1/4" AR-400 wear plate over 1/4" bottom); 3/4" full-face reinforced ram; 2" x 4" shear bridge with AR-400 blade.

Electrical: 3 HP, 1750 RPM, 208/230 V, 3-phase, 60 Hz motor; 115 V controls with 5 A fuse; NEMA 1 enclosure (NEMA 12 optional); wiring in 1/2" UL-rated liquid-tight conduit to J.I.C. standards.

Hydraulics: 5.5 GPM two-stage gear pump; 4" bore x 2" rod x 24" stroke cylinder; 12.5 gallon tank; components rated 1:4 load safety factor for burst pressure.

Safety: Sprinkler head, access hopper door shut-off switch, sliding service door, full-bag shut-off switch, emergency stop switch; 12-minute run-time protection relay.

Discharge: Single bags, continuous tube bagging (up to 10 bags unattended), or 1 to 2 yard front- or rear-load containers, as scheduled.

COMPANY
Superior Chutes and Compactors Installations, Inc.
Mfg: Chutes Enterprises

OFFICE
774 Manor Rd, Suite 207
Staten Island, NY 10314

SHOP
30 N 15th Street
East Orange, NJ 07017

PHONE & EMAIL
Office 718-494-2247
Cell 917-701-3268 · Fax 718-494-2257
chutesenterprises@gmail.com

As part of ongoing product improvements, we reserve the right to change specifications at any time without notice.