REFUSE CONTAINER

2-Yard Container

Front-load or rear-load refuse container for Superior Chutes compactors and container packers

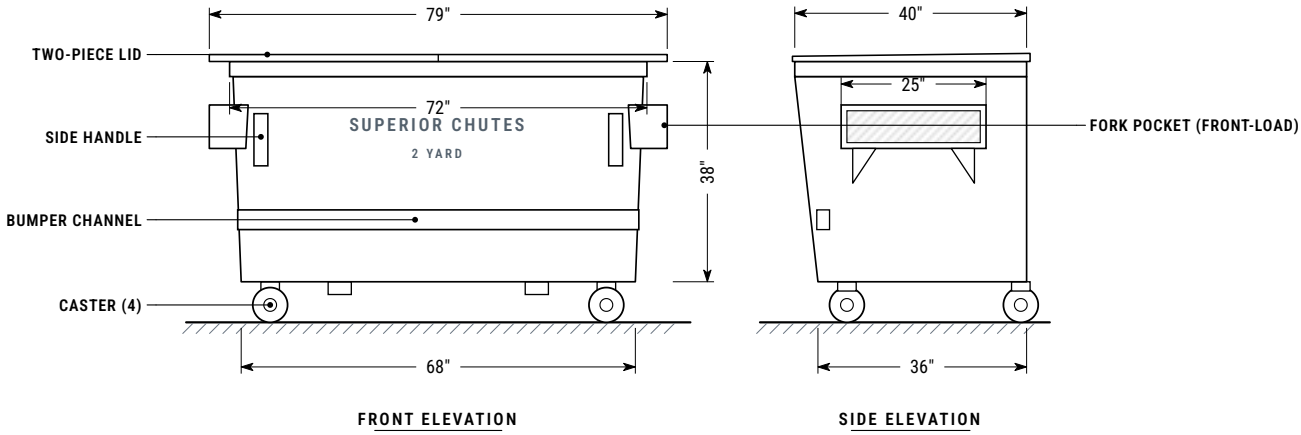

General arrangement — all dimensions in inches. See drawing sheets for complete dimensions.

OVERVIEW

The Superior Chutes 2-yard container is a mobile refuse container designed to receive compacted waste from Superior Chutes compactors and the CE-CP Container Packer, then be rolled out for collection. It is available in a front-load or rear-load configuration to suit the hauler. The front-load configuration shown has a two-piece lid, side fork pockets, a full-width front bumper channel and four casters.

KEY FEATURES

- 2 cubic yard capacity
- Front-load or rear-load configuration to suit the hauler
- Front-load: fork pockets on each side for truck pickup
- Two-piece lid; 79" overall lid length
- Four casters for rolling out to the collection point
- Front bumper channel and side handles
- Pairs with the CE-CP Container Packer; CE-250 and CE-550 accept 1 to 2 yard containers

2 yd^3	79"	38"	40"
CAPACITY	OVERALL LENGTH (LID)	BODY HEIGHT	OVERALL DEPTH (TOP)

COMPANY
Superior Chutes and Compactors Installations, Inc.
Mfg: Chutes Enterprises

OFFICE
774 Manor Rd, Suite 207
Staten Island, NY 10314

SHOP
30 N 15th Street
East Orange, NJ 07017

PHONE & EMAIL
Office 718-494-2247
Cell 917-701-3268 · Fax 718-494-2257
chutesenterprises@gmail.com

1. Two-piece lid
2. Side handle
3. Fork pocket (front-load)
4. Front bumper channel
5. Caster (4)

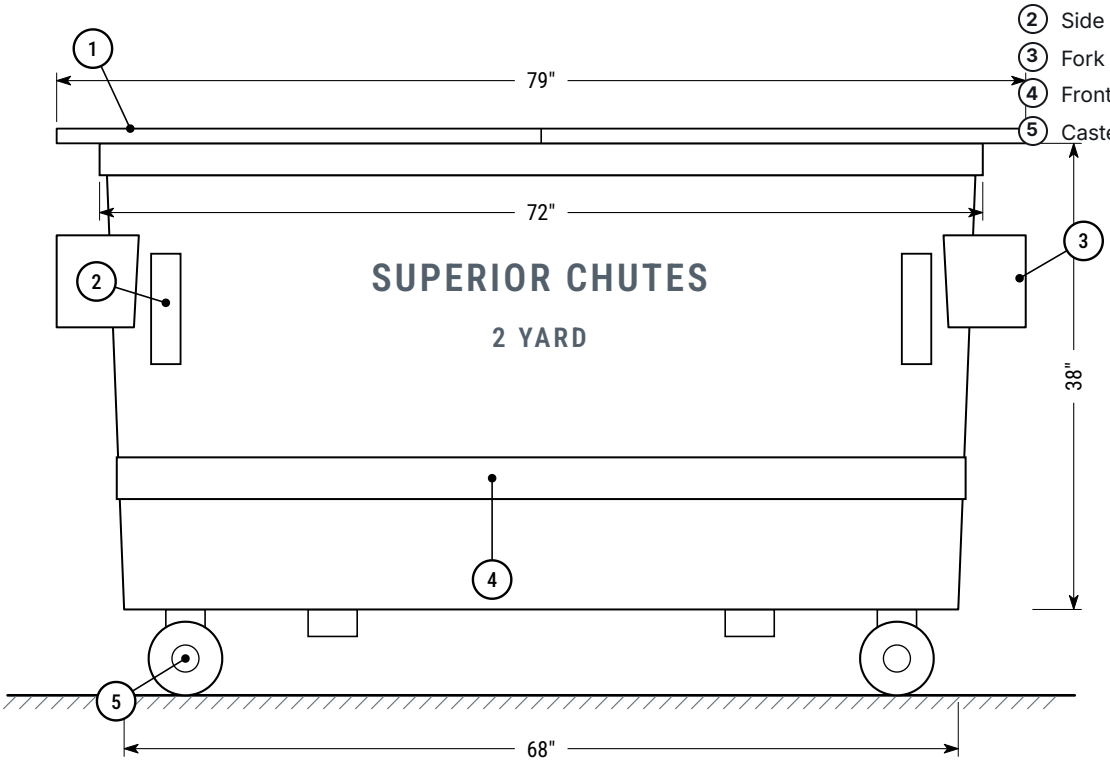

FRONT ELEVATION

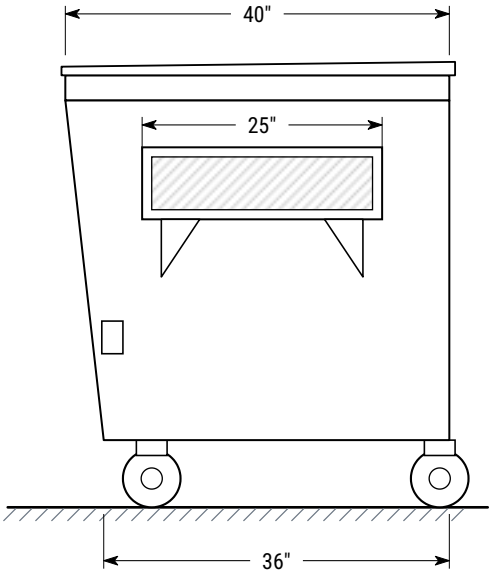

SIDE ELEVATION

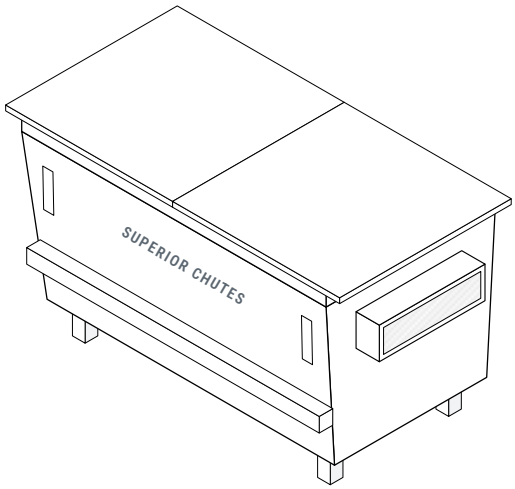

ISOMETRIC

FURNISHED & INSTALLED BY	DRAWING TITLE	MODEL	SCALE	SHEET
SUPERIOR CHUTES & Compactors Installations, Inc. **Mfg: Chutes Enterprises** Office: 774 Manor Rd, Staten Island, NY Shop: 30 N 15th St, East Orange, NJ	**Front & Side Elevations** 2 cubic yard container — front-load configuration shown	**2-Yard Container** UNITS **Inches**	**NTS** DRAWN BY **SC&CI**	**D-1 of 1** STATUS **For Reference**

Specifications

GENERAL

Type	**Mobile refuse container**
Capacity	**2 cubic yards**
Lid	**Two-piece**
Mobility	**Four casters**
Configuration	**Front-load or rear-load (front-load shown)**
Lifting (front-load)	**Fork pockets on each side**

DIMENSIONS

Overall length (lid)	**79"**
Body length — top	**72"**
Body length — bottom	**68"**
Body height	**38"**
Overall depth — top	**40"**
Body depth — bottom	**36"**
Fork pocket length	**25"**

INSTALLATION COORDINATION

- Confirm compactor-room clear height and door widths for rolling the container out.
- Confirm the hauler's pickup requirements and select front-load or rear-load configuration.
- Provide a clear, level floor at the packer discharge end for container positioning.

COMPATIBLE EQUIPMENT

- Superior Chutes CE-CP Container Packer
- Superior Chutes CE-250 and CE-550 compactors (1 to 2 yard container option)

GUIDE SPECIFICATION — SHORT FORM

Suggested wording for project specifications (MasterFormat Section 11 82 00 — Facility Solid Waste Handling Equipment). Edit to suit project.

Manufacturer: Manufactured by Chutes Enterprises, East Orange, NJ; furnished and installed by Superior Chutes and Compactors Installations, Inc.

Type: 2 cubic yard refuse container, front-load or rear-load as scheduled, with two-piece lid and four casters.

Size: Lid 79" overall length; body 72" long at top and 68" at bottom; body height 38"; depth 40" at top and 36" at bottom; fork pockets 25" long.

Compatibility: Suitable for use with Superior Chutes CE-CP Container Packer; quantity as scheduled.

GENERAL ARRANGEMENT — OVERALL DIMENSIONS

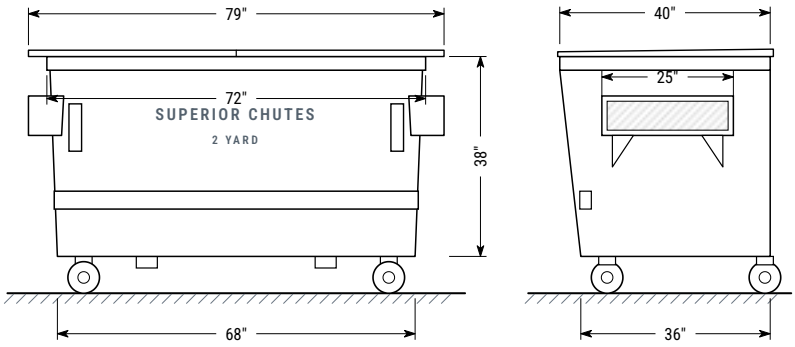

FRONT ELEVATION SIDE ELEVATION

COMPANY
Superior Chutes and Compactors Installations, Inc.
Mfg: Chutes Enterprises

OFFICE
774 Manor Rd, Suite 207
Staten Island, NY 10314

SHOP
30 N 15th Street
East Orange, NJ 07017

PHONE & EMAIL
Office 718-494-2247
Cell 917-701-3268 · Fax 718-494-2257
chutesenterprises@gmail.com

As part of ongoing product improvements, we reserve the right to change specifications at any time without notice.